GENERAL MACHINIST

PAPER - I

ENGINEERING DRAWING

VOCATIONAL EDUCATION

HIGHER SECONDARY - FIRST YEAR

A Publication under
Government of Tamilnadu
Distribution of Free Textbook Programme
(NOT FOR SALE)

Untouchability is a sin

Untouchability is a crime

Untouchability is inhuman

**TAMILNADU
TEXTBOOK CORPORATION**

College Road, Chennai - 600 006.

© Government of Tamilnadu
First Edition - 2010

Chairperson

Dr. R. RAJKUMAR

Head of the Department (Mechanical)
AMK Polytechnic College,
Sembarambakkam, Chennai - 602 103.

Authors

G. JAYAKUMAR JESUDOSS

Vocational Teacher,
Dharmamurthi Rao Bahadur Calavala Cunnan Chetty's
Hindu Higher Secondary School,
Thiruvallur - 602 001.

R. ARUMUGAM

Vocational Teacher,
Govt. Boys Higher Secondary School,
Ondipudhur,
Coimbatore - 641 016.

A. VELAYUTHAM

Vocational Teacher,
Govt. Higher Secondary School,
Nemili,
Vellore Dist - 631 051.

B. PRABHAKARAN

Vocational Teacher,
Govt. Boys Higher Secondary School,
Vandavasi,
Thiruvannamalai Dist-604 408.

C. RAVIVARMAN

Vocational Teacher,
Govt. Boys Higher Secondary School,
Nattrampalli,
Vellore Dist - 635 852.

This book has been prepared by the Directorate of School Education on behalf of the Government of Tamilnadu

This book has been printed on 60 GSM paper

Printed by Web Offset at :

GENERAL MACHINIST

HIGHER SECONDARY FIRST YEAR

PAPER - I ENGINEERING DRAWING

1. Introduction to engineering drawing

- Introduction
- Engineering drawing
- Importance of Engineering drawing
- Geometrical drawing
- Computer graphics

2. Drawing Instruments

- Introduction
- Drawing board
- Tee - square
- Drafter
- Pencils
- Scales
- Set - square
- Protractor
- French curves
- Instrument box
- Drawing Sheets

3. Bureau of Indian Standards

- Introduction
- Lay out of drawing sheet

4. Lettering & Dimensioning

- Introduction
- Importance of lettering
- Proportions of lettering
- Spacing of letters
- Size of letters
- Types of letters
- Dimensioning
- Types of dimensions
- Systems of dimensioning
- Notation of dimensioning
- Types of lines
- General rules for dimensioning
- Incorrect and correct methods of dimensioning

5. Geometrical curves
- Introduction
- Concial sections
- Mathematical definitions of conical sections
- Construction of Ellipse
- Special curves
- Surfaces

6. Scale of a drawing
- Introduction
- Uses of scales
- Types of scales
- Units used in measuring dimensions
- Representative Fraction (R.F.)
- Necessary informations required for constructing scales
- Classifications of scales

7. Theory of projection
- Introduction
- Theory of projection
- Types of projection
- Pictorial projection
- Orthographic projection
- Types of orthographic projection
- Making orthographic projection from isometric views
- Making isometric view from orthographic projection

8. Sectional Views
- Introduction
- Elements of a sectional view
- Guidelines to draw hatching lines in sectional views
- Types of sectional views
- Conventional representation of various materials in section
- Conventional representation of various parts in section

9. Fasteners
- Introduction
- Threads
- Forms of thread
- Bolts, nuts and washers
- Methods of representing threads in drawings
- Keys
- Proportion of keys

10. Assembly drawing

- Introduction
- Assembly drawing
- Classifications of assembly drawings
- Procedure for making assembly drawing from details
- Sample assembly drawings

11. Drawing symbols and Blue print reading

- Introduction
- Machining symbols
- Abbreviations for materials
- Drawing abbreviations
- Representation of various features in drawings
- Blue print reading

12. AutoCAD

- Introduction
- Applications of AutoCAD
- Advantages of AutoCAD
- Hardware and software
- AutoCAD - getting started
- Important Features of AutoCAD
- AutoCAD commands
- Command entry
- File management in AutoCAD
- Draw commands

CONTENTS

		Page No.
1.	Introduction to engineering drawing	1
2.	Drawing instruments	5
3.	Bureau of Indian Standards	14
4.	Lettering & Dimensioning	19
5.	Geometrical curves	39
6.	Scale of a drawing	50
7.	Theory of projection	56
8.	Sectional views	84
9.	Fasteners	95
10.	Assembly drawing	113
11.	Drawing symbols & Blue print reading	124
12.	AutoCAD	139

1. INTRODUCTION TO ENGINEERING DRAWING

1.1 Introduction

The oldest form of communication among human beings is sharing of ideas through some sort of graphical language. They might have put into use a peculiar equipment to make out images. We can even imagine that ancient men used a stick to scratch messages on sand. Early Egyptians used paint and brushes to make pictures to be used as a form of communication. In the field of Engineering drawing, some special equipments (or) tools are required to make images. At present we use pencils, sketch pad and even computer controlled plotting devices for making drawings.

1.2 Engineering drawing

Engineering drawing is an effective method of communication between engineers belonging to various disciplines of engineering. All the necessary features of an object are mentioned on the drawing with proper dimensioning and important remarks. The entire community of engineers can analyse the object for its correctness, accuracy of the object's design and modifications. As all the production related remarks and instructions are graphically expressed in the drawing, it is easy for the production process to be carried out.

Engineering drawing is the language of engineers. This language is spoken, read and written in its own way. It is used as a means of communicating ideas, concepts and designs to all the others involved in the process of production. Engineering drawing is drawn by an engineer having engineering knowledge for engineering purposes. Engineering drawing is the starting point for all engineering disciplines – Mechanical, Automobile, Production, Civil, Architectural, Computer Science, Communication, Instrumentation, Aeronautical , Marine, Agricultural, Mining, Chemical, Textiles etc.

The views of an object are drawn initially on a tracing paper and this drawing is known as **original drawing.** Additional copies of the original drawings are taken according to the need and they are are called as **Blue prints** or **Ferro prints**.

1.3 Importance of Engineering drawing

It is not possible to explain all the details of objects orally irrespective of the size of the object (very small to large). Some of the details may be left out, misrepresented or misunderstood.

There may be some difficulty in understanding oral communications because of the languages spoken by the individuals. Considering such difficulties, drawings are used to communicate with people from different levels in the field of engineering (from engineers to workers). They can understand the drawing and help manufacture new components. Another distinct advantage of drawing is that the details are protected for further reference.

As there is a definite grammar for a language and rules and regulations for games and sports, there is definition for a drawing. Each and every symbol, line, letter and numbers has its unique meaning. Drawings should be made with these definitions in mind. Same methods are to be followed in making drawings for them to be accepted and understood all over the world.

1.4 Geometrical drawing

Geometrical drawing is the foundation for all engineering drawings. It is the art of representing geometrical objects like square, rectangle, circle, cylinder, cone , sphere etc., on a drawing sheet. Geometrical drawing can be classified as

1. Plane geometrical drawing
2. Solid geometrical drawing

When objects having two dimensions (i.e. length and breadth) like square, rectangle and quadrilateral are drawn a drawing sheet, it is known as plane geometrical drawing.

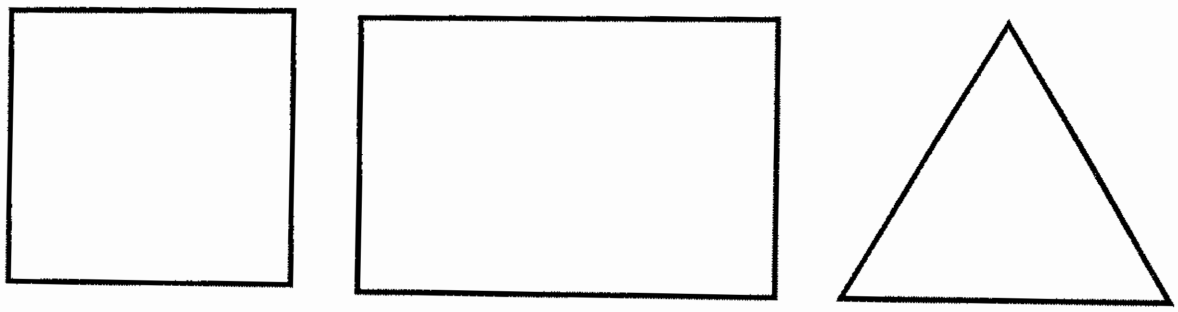

Fig 1.1 Plane geometrical drawing

Solid geometrical drawing is the method of drawing objects having three dimensions (i.e. length, breadth and height) like cube, cylinder, sphere etc on a drawing sheet.

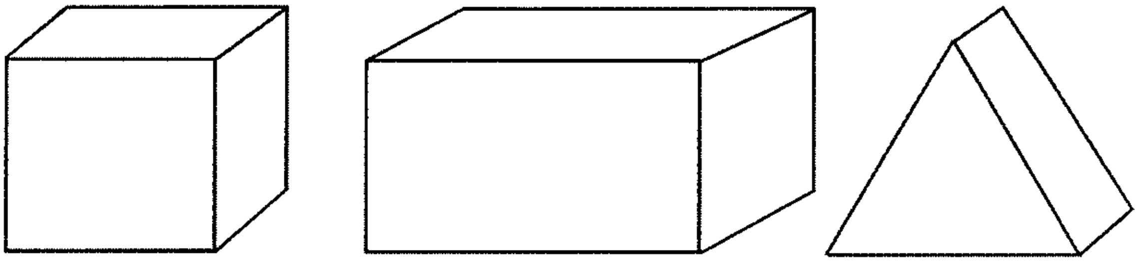

Fig 1.2 Solid geometrical drawing

1.5 Computer graphics

The usage of computer is increasing in all the walks of our life. The engineering profession is greatly benefited by the advent of computers and computer graphics. Complex problems are solved at a faster rate by computers. Computers help us to a greater extent in modifying older designs and thereby planning and constructing more sophisticated engineering systems, machines and structures than in the past.

Computers and associated equipments such as plotters are available at a reasonable cost now. Drawing and designing software application packages like Auto CAD, Pro-e can be utilized to make computer graphics. Hence, the computer graphics can be seen as an advanced method of traditional constructing methods.

In the following chapters , some basic ideas are given to make simple drawings involving both plane and solid geometrical constructions,. Some primitive ideas regarding making of simple constructions using AutoCAD are also given. Every aspiring engineer needs this knowledge to represent his concept of ideas graphically.

QUESTIONS

I A. Choose the correct option

1. Drawing different views of an object on a tracing sheet is

   a. Drawing b. Original drawing

   c. Grammer of a drawing d. Blue print

2. The drawings that are understood all over the World are made according to

   a. the definition of a drawing b. computer graphics

   c. manual drawings d. tracing paper

3. The basic drawing for all engineering drawings is

   a. computer graphics b. original drawing

   c. geometrical drawing d. manual drawing

4. Cartoon movies are made using

   a. computer graphics b. plane geometrical drawing

   c. original drawing d. manual drawing

I B. Answer the following questions in one or two words

1. What is the name of copies taken from the original drawings?
2. Mention any two branches of engineering.
3. What are the types of geometrical drawings ?
4. Mentiion any one use of computer graphics.
5. Mention the names of software used to make computer aided drawings?

II. Answer the following questions in one or two sentences

1. What is a drawing?
2. Mention the importance of engineering drawings.
3. What do you mean by geometrical drawing?
4. What is plane geometrical drawing?
5. What is solid geometrical drawing?

III. Answer the following question in about a page

1. What is the importance of engineering drawing ? Explain.

2. DRAWING INSTRUMENTS

2.1 Introduction

The necessity of proper equipments and instruments for making drawings was discussed in the previous lesson. Good quality of drawing instruments is needed to make accurate drawings. However, these instruments should be handled correctly and accurately. Following are the instruments required for preparing drawings.

1. Drawing board
2. Tee – square
3. Drafter
4. Pencils and pencil leads
5. Scales
6. Set squares
7. Protractors
8. French curves
9. Instrument box
   a. Compass
   b. Divider
   c. Inking pen
   d. Lengthening bar
10. Drawing sheets

2.2 Drawing board

A drawing board is made of four or five strips of soft wood with approximate thickness of 20mm. The wood should be well-seasoned and soft and made of pine, oak or fir. The strips are cleated at the back by battens with screws to prevent them from warping.

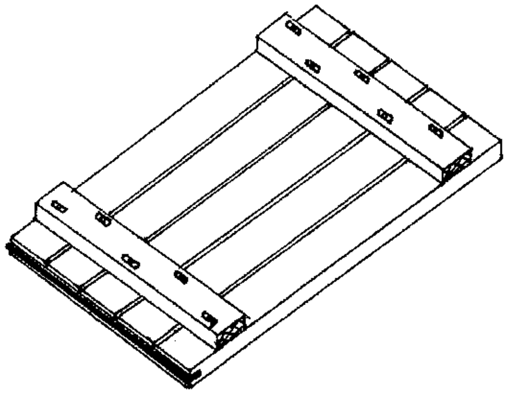

Fig. 2.1 Drawing board

A straight ebony strip is fitted on the left edge of the board. This enables the movements of tee-square on the board. *The drawing board is illustrated in Fig, 2.1*

The top surface of the drawing board should be flat and smooth and the thickness uniform. B.I.S (Bureau of Indian Standards) has standardized the sizes of drawing board as follows

Sl. No.	Designation	Size in mm L x W x T	Size of sheet
1	D_0	1500 x 1000 x 25	A_0
2	D_1	1000 x 700 x 25	A_1
3	D_2	700 x 500 x 15	A_2
4	D_3	500 x 350 x 15	A_3

2.3 Tee-square

Tee-square is made of hard quality of wood like teak or mahogany. There are two parts of a Tee-square namely - stock and blade. The working edge is formed by an ebony piece attached to the blade. The stock slides along the ebony piece attached to the drawing board. These two parts are connected at right angles to each other by means of screws or dowel pins. The working length of the Tee-square is approximately equal to the length of the drawing board. *Tee square is illustrated in Fig, 2.2*

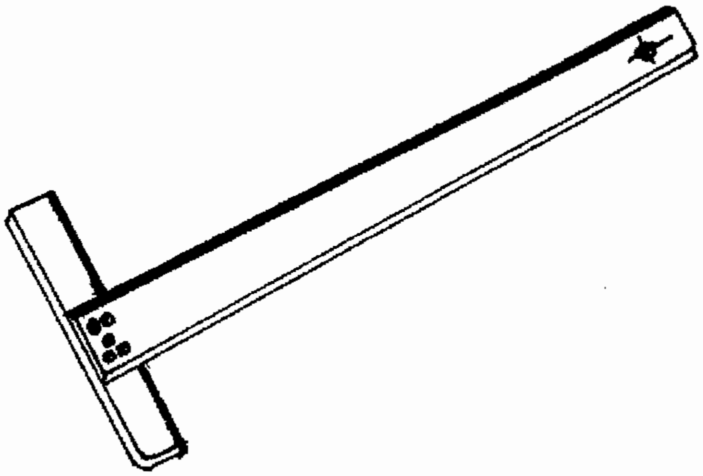

Fig. 2.2 Tee-square

Standard sizes of Tee-square according to B.I.S are

Sl. No.	Designation	Length of the working edge of the blade in mm
1	T_0	1500 ± 10
2	T_1	1000 ± 10
3	T_2	700 ± 5
4	T_3	500 ± 5

Tee-squares are used to draw horizontal lines parallel to each other. When used along with set-square, it is used as a base to draw various angles.

2.4 Drafter

It comprises of a pair of steel strips hinged at the centre. At one end, a clamp is provided. This clamp is useful in clamping the drafter at the left side top corner of the drawing board. The other end is known as working end which consists of two perpendicular scales and a circular base. The perpendicular scales are graduated in millimeters whereas circular scale is graduated in degrees up to 360^0. The working end can be oriented to any angle and fixed at the position with help of a knob.

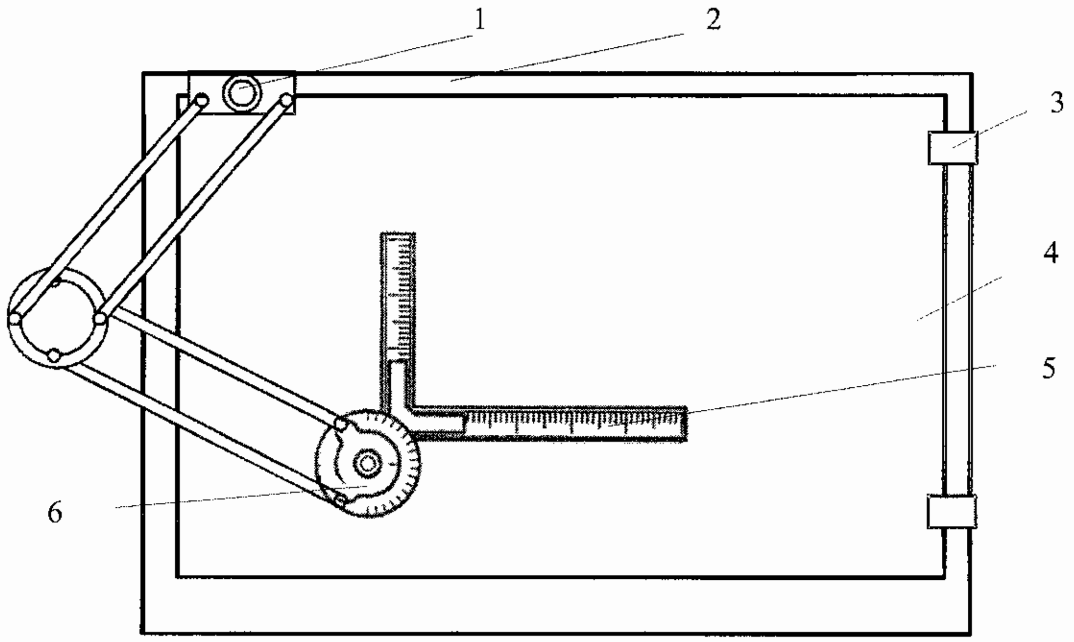

Fig. 2.3 Drafter

1. Clamp 2. Drawing board 3. Clip 4. Drawing sheet

5. Perpendicular scales 6. Circular scale

When the clamping end is fitted to the drawing board, the working end can be made to slide over the board. After the perpendicular scales are set at the desired angle, parallel or perpendicular lines can be drawn. Taking reference from the circular scale, lines at any desired angle can also be drawn. *Fig. 2.3 illustrates a Drafter.*

2.5 Pencils

Pencils are used for making drawings on drawing sheets. The quality of the pencil determines the accuracy and appearance of the drawing. The grades of pencils are designated by markings made on each of them. The grade of the pencil describes the hardness of the graphite lead used. The grades of pencils range from 9H to 7B where 9H is the hardest and 7B is the softest. Hard pencils such as 2H,H are used for making engineering drawing and for lettering and dimensioning, softer pencils like HB are used. HB pencils are also used for making freehand sketches. The grades of the pencils may be categorised as

1. Soft	7B to 2B
2. Medium	B to 3H
3. Hard	4H to 9H

2.6 Scales

The proportion of dimensions between the drawing of an object and the object itself is the scale of the drawing. Different proportions are represented on a set of scales to make drawings of objects having different range of dimensions. The set of scales are designated as M_1, M_2, M_3 ....M_8 and on each scale, two different proportions are marked. For example, on scale M_1, Full size (1:1) and Half size (1:2) are marked .

M_2	1:2.5	&	1:5
M_3	1:10	&	1:20
M_4	1:50	&	1:100
M_5	1:200	&	1:500
M_6	1:300	&	1:600
M_7	1:400	&	1:800
M_8	1:1000	&	1:2000

The scales are flat or triangular and are made of celluloid, cardboard, wood or metal. The concept of scales is explained in detail later in Chapter 6.

2.7 Set-square

Set-squares are useful in drawing perpendicular lines and lines at 30^0, 45^0, 60^0 and 90^0 to the horizontal lines drawn with Tee-square. By the combined use of two set-squares, we can also draw lines at 15^0, 75^0 and 105^0 to the horizontal line.

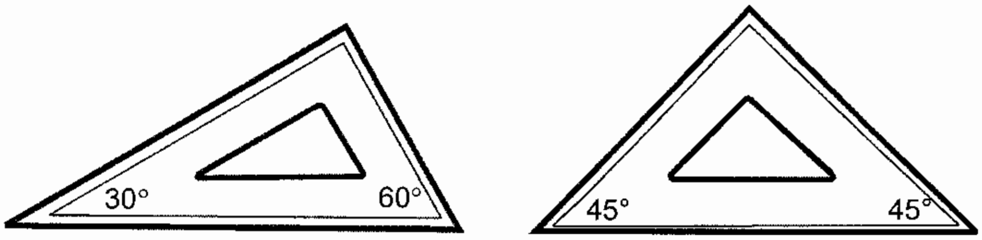

Fig. 2.4 Set-squares

There are two types of set-square

1. Thirty – Sixty (30^0-60^0)   2. Forty five (45^0)

30^0-60^0 set-square has edges having 30 degrees and 60 degrees apart from an edge which is right angled. The 45^0 set-square also has a right angled edge besides two edges having 45^0 and is in the form of an isosceles triangle. They are made of transparent celluloid to enable us to see the lines underneath them. *Fig. 2.4 illustrates set squares.*

2.8 Protractor

Protractors are used to measure or construct angles which cannot be done by set-square. The shape of the protractor may be circular or semi-circular. They are made of celluloid, wood or ivory. *Fig. 2.5 illustrates a Protractor.*

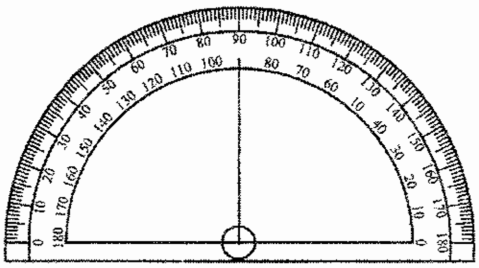

Fig. 2.5 Protractor

2.9 French curves

French curves are the templates made of plastic or celluloid sheet. Profiles and contours of different shapes and sizes are cut on the edges of French curves. Curved lines and circular arcs which cannot be drawn with a compass can quickly be drawn with French curves. *Fig. 2.5 illustrates French Curves.*

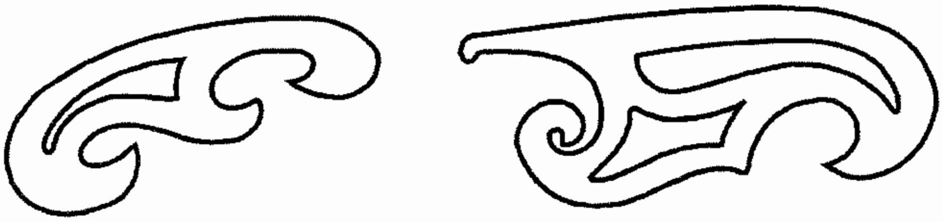

Fig. 2.6 French curves

2.10 Instrument box

The instrument box contains different drawing instruments for drawing different types of drawings. The instruments are

1. Large size compass
2. Small bow compass
3. Small ink bow compass
4. Large size divider
5. Small bow divider
6. Lengthening bar
7. Inking pen
8. Pin point
9. Ink point
10. Lead case

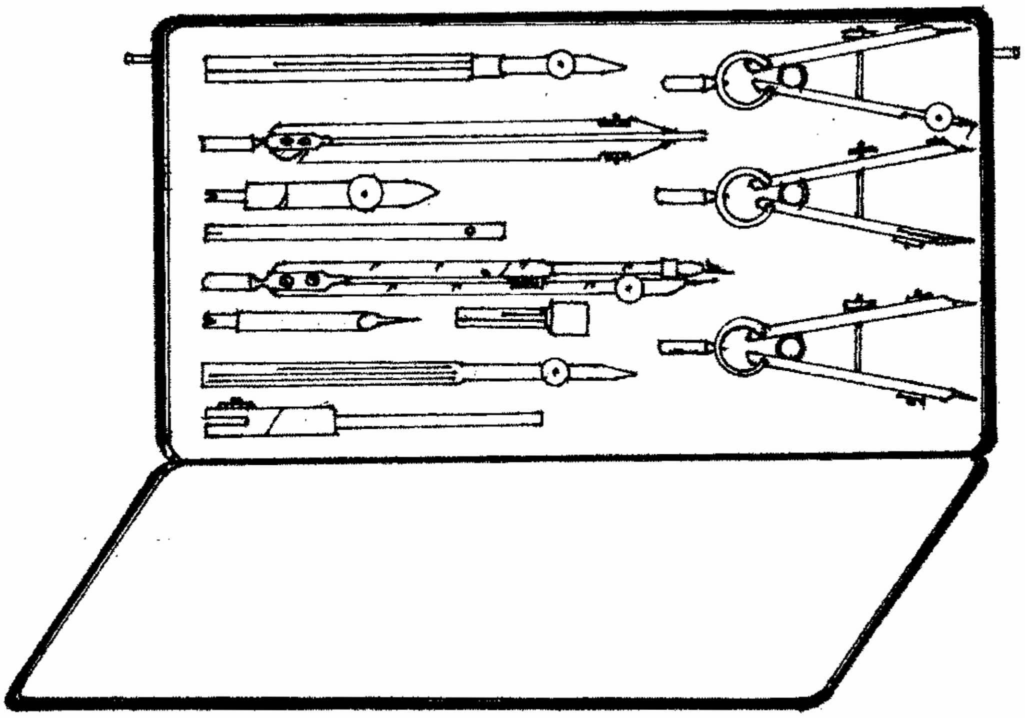

Fig. 2.7 Instruments Box

2.10.1 Compass

Compasses are used for drawing circles and acrs of required sizes. It has two metal legs joined at the top with the help of a knee joint. One of the two legs is fitted with a adjustable needle. The other leg has an attachment which can hold an inking device (or) a pencil lead tip.

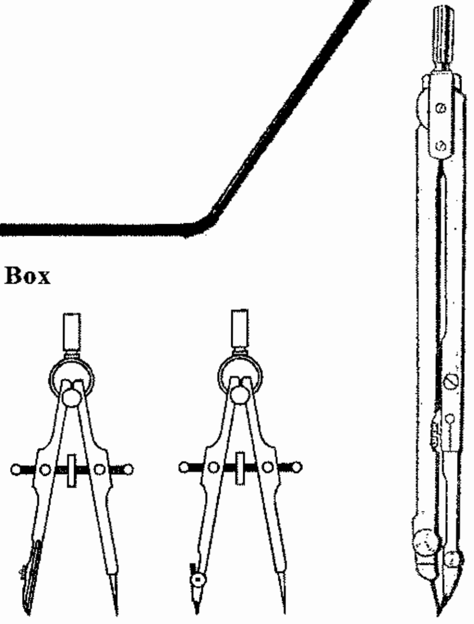

A B C

Fig. 2.8 Types of compasses
A - Bow compass B - Ink Bow compass
C - Large size compass

The **large size compass** is approximately 150 mm long and the **small size compasses** are 95 mm long. **Small bow compass** can hold pencil leads and an ink bow is attached to one of the legs of the **small ink bow compass.** Circles and acrs of very large radius are drawn with a lengthening bar attached to the second leg.

2.10.2 Divider

Straight lines or curved lines are divided into required number of equal parts with the help of dividers. (Divider is also useful in transferring dimensions from a part to another part in the drawing and to set off given distances from the scale to the drawing) It is very similar in construction to a compass but for the fact that both the legs of the divider are provided with steel points.

Inking pen is used to draw straight lines and curved lines in ink. It consists of a metal nib fitted to an ivory or metal holder. **Pin point** and **ink point** are used as attachment to a large compass. Lead case is useful in holding lead sticks of different grades.

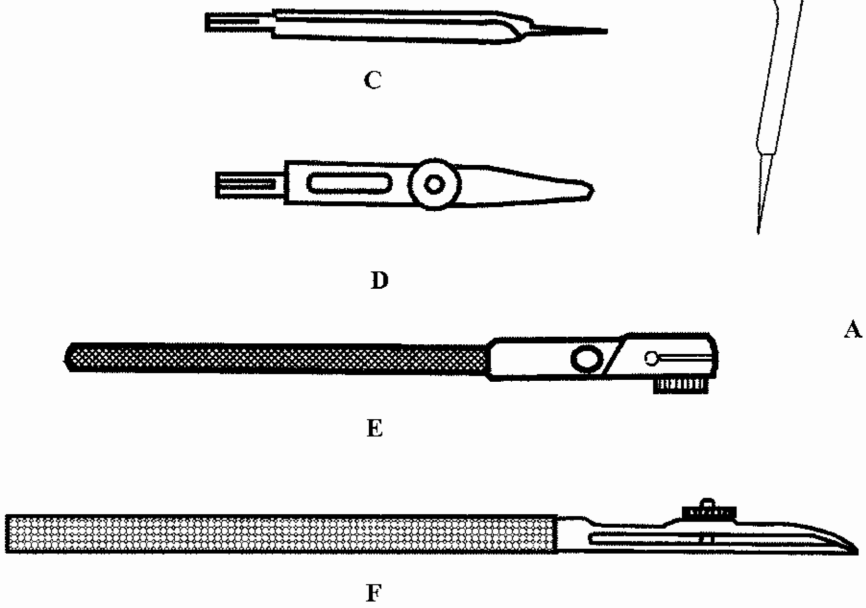

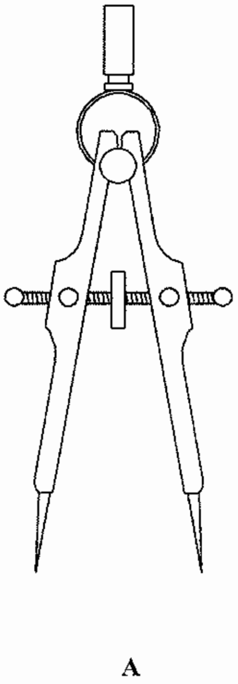

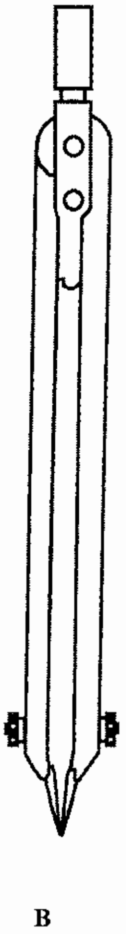

Fig. 2.9 Drawing instruments
A Small size divider B. Large size divider C. Pin point D. Ink point E. Lengthening bar F. Inking pen

2.11 Drawing Sheets

Different qualities of drawing sheets are used for making drawings. The quality of the sheet depends upon the nature of drawing. It should be tough, strong and of uniform thickness. The effect of erasing should not be felt and ink should not spread out. The smooth side of the sheet should always be used for drawing.

The standard sizes of trimmed drawing sheets recommended by ISO (International Organization for Standardiaztion) and adopted by BIS (Bureau of Indian Standards) – BIS : 10711 -1983 are as follows.

Sl .No	Designation	Size	
		Length	Width
1	A0	1189	841
2	A1	841	594
3	A2	594	420
4	A3	420	297
5	A4	297	210

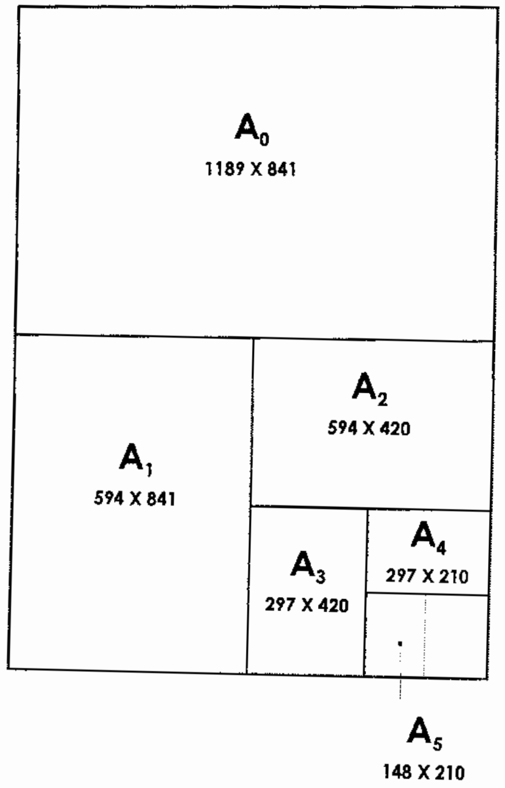

Fig. 2.10
Different sizes of drawing sheets

QUESTIONS

I A. Choose the correct option

1. Drawing boards with dimensions of 1000 x 700 x 25 is designated as

   a. D_0 b. D_1 c. D_2 d. D_3

2. Drawing sheets with dimensions of 297 x 210 is designated as

   a. A_0 b. A_1 c. A_2 d. A_4

3. Horizontal parallel lines are drawn with

   a. Tee square b. Protractor
   c. French curves d. Drawing board

4. Freehand sketches are made with

   a. 2B pencils b. 4B pencils
   c. HB pencils d. 2H pencils

5. Angular lines are drawn and measured with

   a. divider b. protractor
   c. compasses d. Tee square

6. Straight and curved lines may be divided equally with

   a. divider b. protractor
   c. compasses d. inking pen

I B. Answer the following questions in one or two words

1. What are the two parts of a Tee-square?
2. Mention the two types of set-square.
3. What are the grades of drawing pencils ?
4. What are the scales made of ?

II. Answer the following questions in one or two sentences

1. What is the use of french curves ?
2. Mention the use of inking pen.
3. What are the instruments found in the instrument box ?

III. Answer the following question in about a page

1. Draw and explain the construction and uses of a drafter.
2. Write short notes on

   a. Protractor b. French curves c. Compass d. Divider

3. BUREAU OF INDIAN STANDARDS

3.1. Introduction

The filed of engineering and Technology is fast evolving day by day to set newer trends in the world community. The arrival of foreign technologies, technical tie – ups between different countries, and exchange of new technologies have made it mandatory to set specific international standards in the field. This need is most felt in preparing and understanding of engineering drawing. **Indian Standards Institution (ISI)** establizhed in the year 1947, formulated the code of practice for general engineering drawing in the year 1955. ISI was taken over and renamed as **Bureau of Indian Standards (B.I.S.)** in the year 1987 by an Act in the Indian Parliament.

In the year 1987, B.I.S. has adopted the standards of **I.S.O. (International Organization for Standardization)** in full. The following are the topics adopted by B.I.S. in the field of Engineering drawing (latest version)

Sl. No.	Standard	Indian Status	Corresponding ISO standard
1.	Drawing sheet (Sizes, layout etc.)	IS : 10711 – 2001	ISO : 5457 - 1999
2.	General principles of presentation of Technical Drawing (Lines etc.)	IS : 10714 – 2001	ISO : 128 - 1996
3.	Lettering on Technical Drawing	IS : 9609 – 2001	ISO : 3098-1997
4.	Methods of Dimensioning	IS : 10718 - 1993	ISO : 3040 – 1990

(Note : In the standards mentioned above, either the whole topic or certain part(s) of the topic may have been withdrawn and new standards introduced)

3.2. Lay out of drawing sheet

The layout of any drawing sheet should make it easy for the readers to locate all important references of the drawing . For this a standard arrangement should be followed in which all the informations are included. The **lay out of a drawing** sheet should have the following features

1. Margin
2. Title block
3. Parts list
4. Revision panel
5. Zone system
6. Folding marks

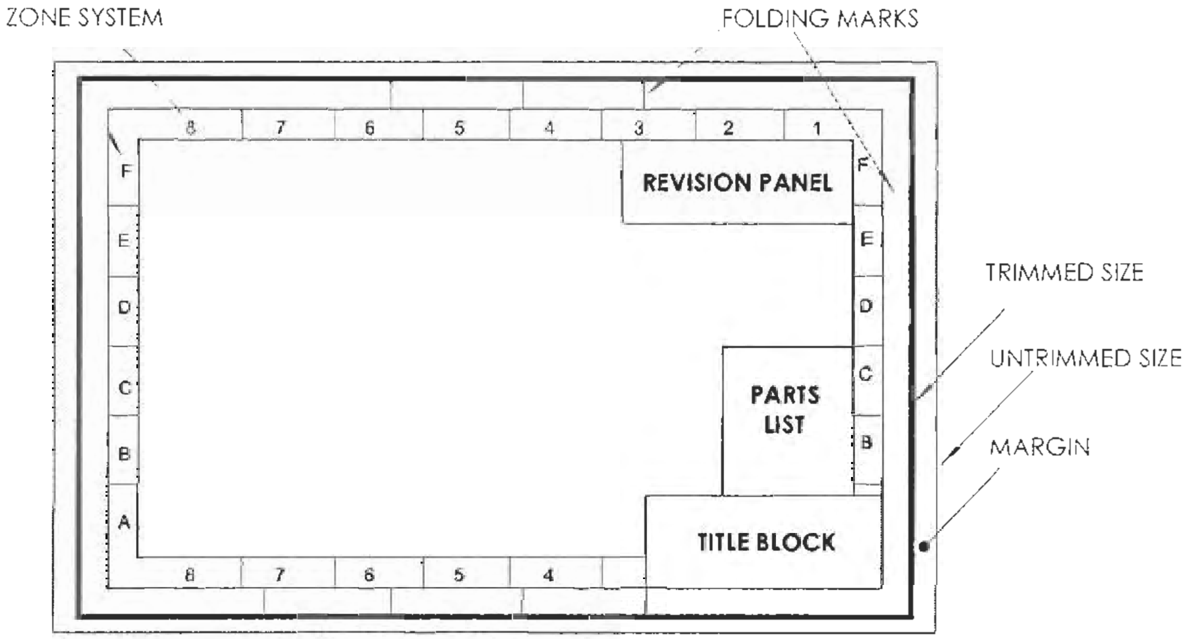

Fig. 3.1 Lay out of a drawing sheet

Lay out of a drawing sheet is illustrated in Fig 3.1

3.2.1. Margin

Margin is provided in a drawing sheet to enable it to be trimmed. After trimming, the sizes of the standard drawing sheets should be equal to the sizes of trimmed sheets recommended by B.I.S. (It is already given in section 2.11. *Fig. 3.1 shows the provision of margin in a drawing sheet.*

Apart from margins, border lines are drawn to get a complete working space. Drawing of border lines should also facilitate easy filing or binding.

3.2.2 Title Block

Provision of title block in a drawing is necessary as it gives all informations regarding the drawing. It is placed at the bottom right hand corner of the drawing sheet. B.I.S. has recommended the size of the title block to be 185 mm X 65 mm. The size is the same for all designated sizes of the sheet (ie. from A0 to A5). The title block should contain the following informations

1. Title of drawing
2. Name of the Organization (or) firm
3. Drawing number – a unique identifier for filing
4. Scale
5. Symbol representing the method of projection (either first or third angle)
6. Initials of the staff - (Designed, drawn, checked & issued) with date

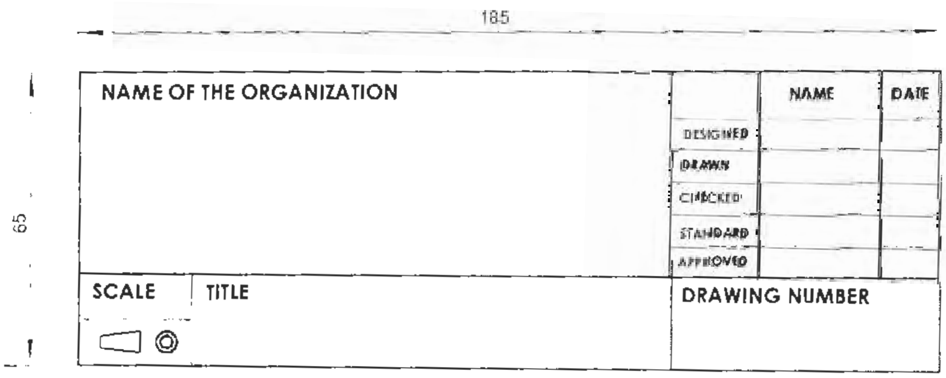

Fig. 3.2 Title block of a drawing sheet

A sample title block is illustrated in Fig. 3.2

3.2.3. Parts List

Parts list is a table to show the names of parts drawn in the sheet and their related details. Parts of large machinies may be grouped as assemblies and drawn on different sheets. The details of the parts in these assemblies are shown in respective sheets. The parts list is located at the right side bottom just above the title block of the drawing. The parts list should contain the following details in it.

1. part number
2. name of the parts (or) description
3. quantity required
4. cross references to other drawings
5. material specification

When the parts list is very large, a seprate sheet may be used for parts list alone.

3.2.4. Revision panel

Revision panel is a table to record all alterations and revisions made in a drawing from time to time. Details such as the revision number, date, zone, brief record and dated initials of the approving authority are recorded in it. It may be located at right side top corner of the drawing or in the title block itself.

3.2.5. Zone system

Zone system is a feature used as reference to identify the location where the revision is actually made. For this, the working space of the sheet (A2, A1, & A0) is divided into equal zones. The zones are referenced by the column and the row they belong to. The columns are designated by numarals both at the top and bottom, and the rows are designated by letters both at right side and left side of the sheet.

3.2.6. Folding marks

Folding marks are made on the drawing sheet to enable them to be folded for proper filing or binding. Folding is done by two different methods to serve two purposse. One method of folding is done for easy filing or binding. This method allows the drawing sheets to be unfolded and refolded when attached with other papers, without the necersity of removal from the file. The other method is used for the sheet to be stored in filing cabinets. In both methods, the folding is done in such a menner that the title block is visible on the folded sheets.

QUESTIONS

I A.Choose the correct option

1. BIS refers to

a. Bharath Industrial Society
b. Bureau of Indian Standards
c. British Institute of Standards
d. Bureau of International Standards.

2. ISI was taken over and renamed as BIS in the year

a. 1947 b. 1983 c. 1987 d. 1999.

I B. Answer the following questions in one or two words

1. When was B.I.S established ?
2. What does ISO refer to ?

II. Answer the following questions in one or two sentences

1. What is a title block ?
2. What is a revision panel ?

III. Answer the following question in about a page

1. What are the informations to be furnished in a title block ?
2. Draw a sample lay-out of a drawing sheet and explain its features.

4. LETTERING & DIMENSIONING

4.1 Introduction

Lettering is a important feature in Engineering drawings. Writing of titles and subtitles of drawings, dimensioning the parts of the objects drawn, writing the scale and other details is called **dimensioning.** As the use of instruments for lettering will consume more time, It is very essential to do lettering free hand with speed, neatness, and beauty of form.

The requirements of lettering, namely types and sizes of letters and techniques of letterings are specified in IS 9609-1983 (Lettering for Technical Drawings)

4.2 Importance of lettering

Neatness, legibility, uniformity, suitability for microfilming and photocopying are the main features of lettering. Poor lettering will spoil the appearance of a drawing and lead to wrong results. Lettering is the talk of the drawing and so it is very important that it is done correctly to finish the drawing completely.

4.3 Proportions of lettering

There is no specified proportions for each letter of alphabets while lettering. Considering uniformity, a proportion between the height and the width his to be followed. There are three proportions by which lettering can be done best. They are

1. Normal lettering NORMAL LETTERING
2. Condensed lettering CONDENSED LETTERING
3. Extended lettering EXTENDED LETTERING

Normal lettering will have normal height and width and finds application in general use. Condensed lettering has shortened width with respect to its height and is used where space available is limited. Extended lettering will have more width and normal height.

4.4. Spacing of letters

The distance left between two adjacent letters while lettering is known as spacing of letters. Equal spaces have to be left between letters for better appearance. Spacing is judged by observation and done by practice.

A distance equal to the 3/5th of the height of the letter has to be left between two successive words. The space between two lines should be equal to 1½ times the height of the letters.

4.5 Size of letters

The size of letters in engineering drawing is the height of the letters. B.I.S recommends standard sizes of lettering for various features and they are listed below

Sl .No	Feature	Size (Hieght in mm)
1	Drawing Numbers, Letters indicating cutting plane section	10, 12
2	Title of the drawing	6, 8
3	Sub-titles and headings	3, 4, 5 & 6
4	Material List, Dimensioning, Schedules, Notes	3, 4 & 5
5	Tolerances Alteration entries	2 & 3

4.6 Types of letters

The lettering in which the alphabets are written with uniform thickness is known as Gothic lettering. Gothic lettering may be done on single stroke and double stroke. Double stroke letters are thicker than single stroke letters.

Types of letters

1. Vertical letters
   a) Upper case letters (Capital)
   b) Lower case letters

2. Inclined letters
   a) Upper case letters (Capital)
   b) Lower case letters

4.6.1 Vertical letters

If the direction of alphabets and numerals is vertical, the letters are known as vertical letters. Both upper case and lower case letters are written in this fashion.

4.6.2 Inclined letters

When the letters are written inclined to the horizontal line, they are called inclined letters. The angle of inclination is approximately 75° from right to left.

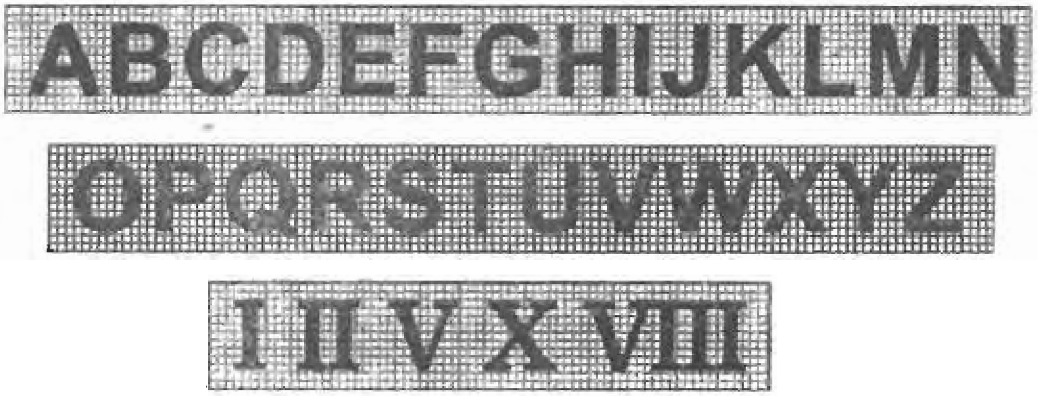

Fig. 4.1 Vertical upper case letters

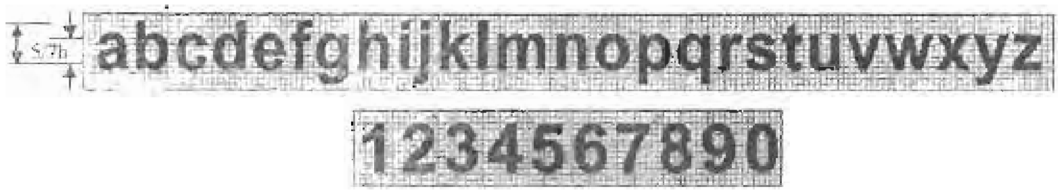

Fig. 4.2 Vertical lower case letters

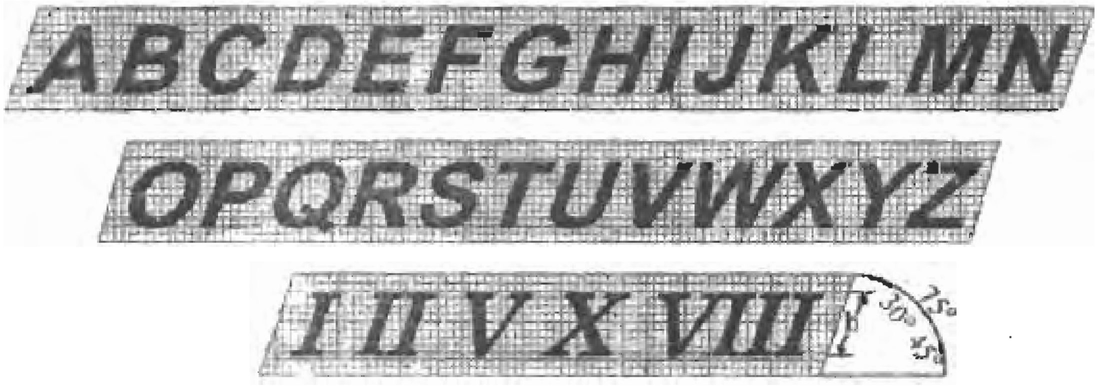

Fig. 4.3 Inclined upper case letters

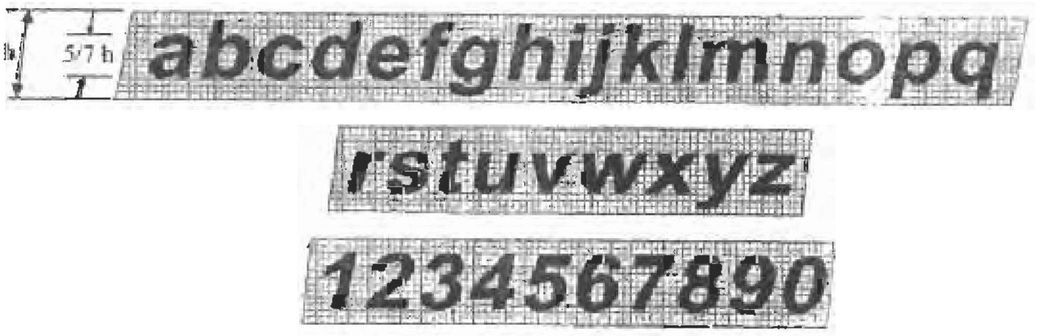

Fig. 4.4 Inclined lower case letters

4.7 Dimensioning

Drawings are made to represent the actual shape and size of the object to be produced. So, it is necessary to place proper dimensions and related informations regarding different parts of the object. In case the dimensioning is not done properly, there will be a great loss in materials, labour and time.

Dimensioning is known as the method of writing various sizes (or) measurements of an object and other important informations such as tolerances on a finished drawing. It should be done with great care that no information is left out in describing the object completely.

4.8 Types of dimensions

It should be noted that any object is made up of different shapes in the form of a cube, cylinder, cone, sphere etc., Hence it is easy to place dimensions of these geometrical forms separately and to locate each from the other. So the dimensions used in engineering drawing may be classified as

1. Size dimensions 2. Locating dimensions

4.8.1 Size dimensions

Size dimensions are used to indicate various sizes of an object such as length, breadth, height, radius and diameter. In the diagram shown below size dimensions are represented by the letter 'S'

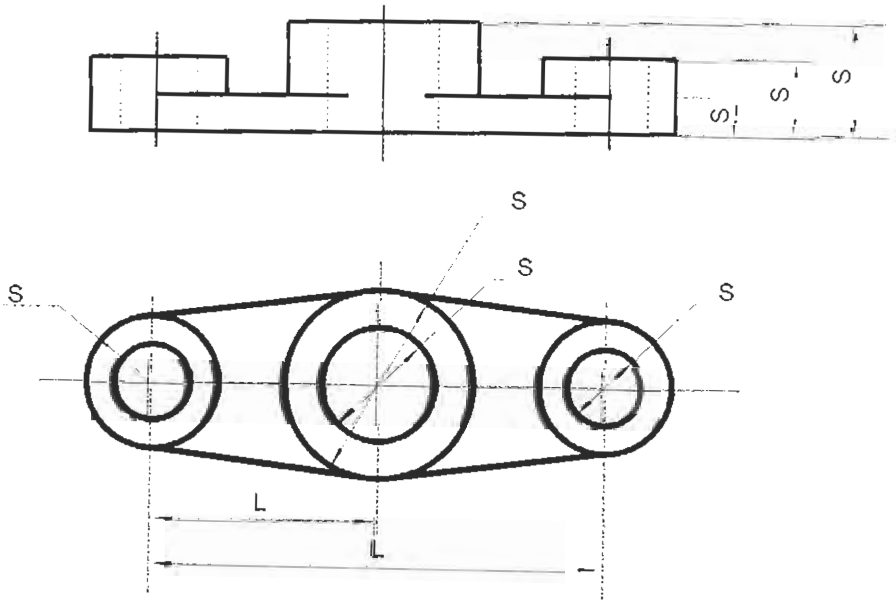

Fig. 4.5 Size and locating dimensions
S - Size dimensions L - Locating dimension

4.8.2 Locating dimensions

Locating dimensions are used to locate the position of a feature of the object with relation to another feature. Distances between the centers of two holes and the distance between the centre of a hole to an edge of the object are some examples for locating dimensions. The letter 'L' represents locating dimensions in the diagram.

4.9 Systems of dimensioning

According to B.I.S., there are two systems of placing dimensions on drawings and they are

1. Aligned system
2. Unidirectional system

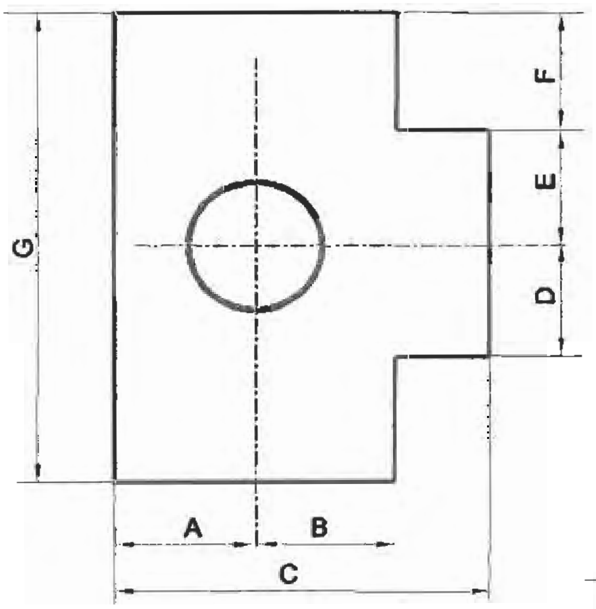

Fig. 4.6 Aligned system of dimensioning

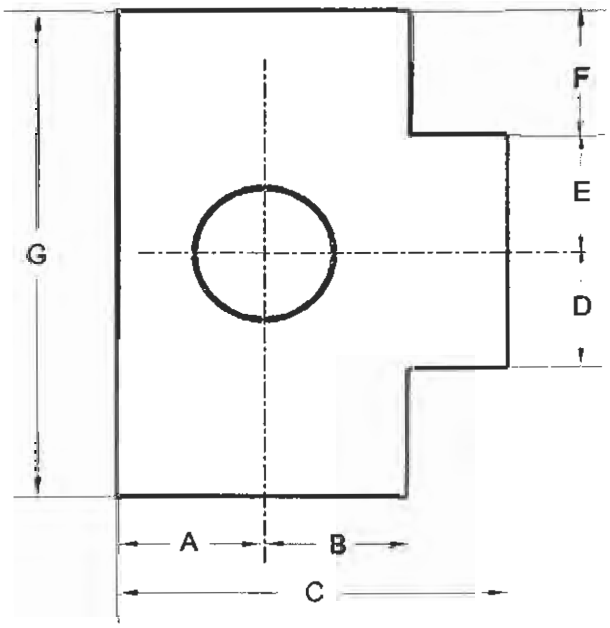

Fig. 4.7 Unidirectional system of dimensioning

4.9.1 Aligned system

In this system, the dimensions are placed in a manner to read them from the bottom or from the right side of the drawing. All the dimensions are placed above the dimensions lines. Aligned system of dimensioning is commonly used in engineering drawing.

4.9.2 Unidirectional system

In this system, the dimensions are placed so that they may be read from the bottom of the drawing only. The dimensions are placed approximately at the middle of the dimension line by breaking it. There is no restriction in controlling the direction of dimension lines.

4.10 Notation of dimensioning

The dimension lines, extension lines, leader lines, arrow heads, dimension figures, notes and symbols make up the notation of dimensioning.

4.10.1 Dimension line

Dimension lines are used to indicate the measurement in numbers at a space above them or at a space created by breaking them approximately at their centre. Dimension line is drawn as thin continuous line.

4.10.2 Extension line

It is the line that extends from the outline of the object on a drawing. It is a continuous thin line extending atleast about 2mm beyond the dimension line.

4.10.3 Leader line

When some notes are to be made regarding a specific feature of a drawing, leader lines are used. They extend from where the notes have to be applied to a point where the notes are actually written. Leader line has an arrow at one end which touches the particular feature. It is drawn at any convenient angle between 30° to 60°.

4.10.4 Arrow head

Arrow heads are placed at both ends of a dimension line. They touch the extension lines drawn from the outline of the part and indicates the extent of a dimension. The length and width of the arrow should be in the ratio 3:1.

4.10.5 Dimension figure

The size of a specific feature is indicated by the dimension figure either as a numeral or as symbols like Ø, R followed by numerals.

4.11 Types of lines

Engineering drawing is made by the combination of different types of lines. Each line shown in the drawing is meant to represent a seprate meaning. So it is necessary to understand the types of lines and their meaning to make or read a drawing successfully.

4.11.1 Continuous thick line

A continuous thick line in a drawing represents a visible edge or outline. It is drawn with a **H** or **HB** grade pencil.

4.11.2 Continuous thin line

Continuous thin lines are used for construction of a drawing. These lines are also used for drawing dimension lines, extension lines, leader lines, and sectional lines (hatcling lines). When used as construction lines, they do not appear on the finished drawing. But in geomentrical drawings, they are not removed. Continuous thin lines are drawn with **2H** pencils.

4.11.3 Short dashes

Short dashes represent hidden features or outlines in a drawing. The dashes should be of uniform length and the spacing equal. They are drawn with **H** pencils.

4.11.4 Long chain (thin)

Long chain lines are drawn as an alternative combination of a long dash and a short dash. The lengths of both long dashes and short dashes are to be maintained uniform and they are equispaced. They represent centre lines, extreme positions of movable parts and pitch circles in drawings. This type of line is drawn with a **2H** pencil.

4.11.5 Long chain (thick at ends)

It is very similar to a long chain line except that the terminal long dashes are drawn thick. Cutting plane lines are represented by this type of line. The terminal dashes are drawn with **H** pencil and others with **2H** pencils.

4.11.6 Long chain (Thick)

A long chain line is drawn thick completely for this type of line. The surfaces which are to receive additional treatment are represented by a long chain (thick) line. It is drawn with a **HB** pencil.

4.11.7 Continuous thin (Wavy)

Irregular boundary lines and short break lines are drawn as wavy continuous thin lines. They are drawn with **2H** pencils.

4.11.8 Ruled line and short zigzag (thin)

These lines indicate long break lines. When a long structure of uniform shape is to be shown on a drawing, its view is intercepted by this line and it is drawn with **2H** pencil.

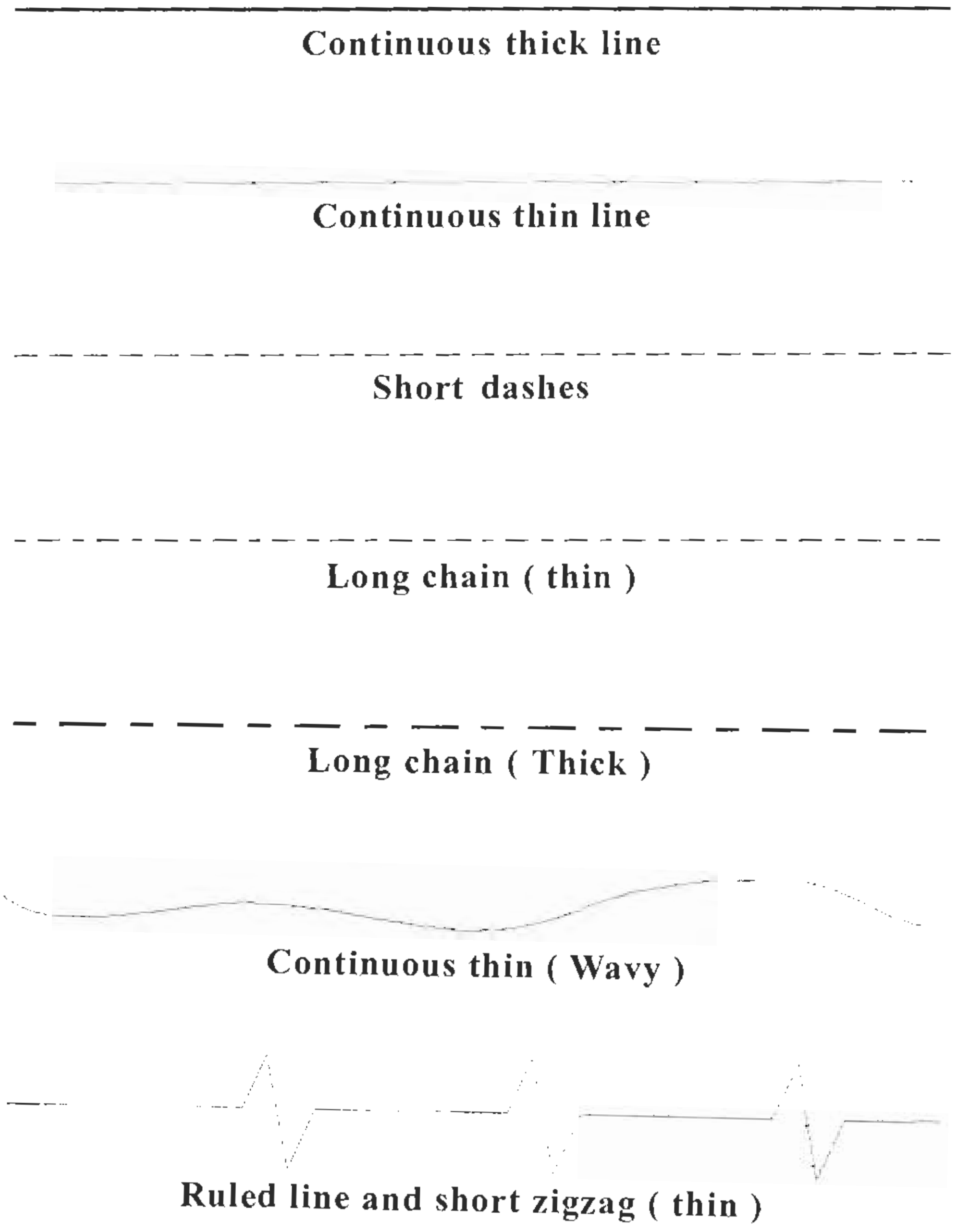

Fig. 4.8 Types of lines

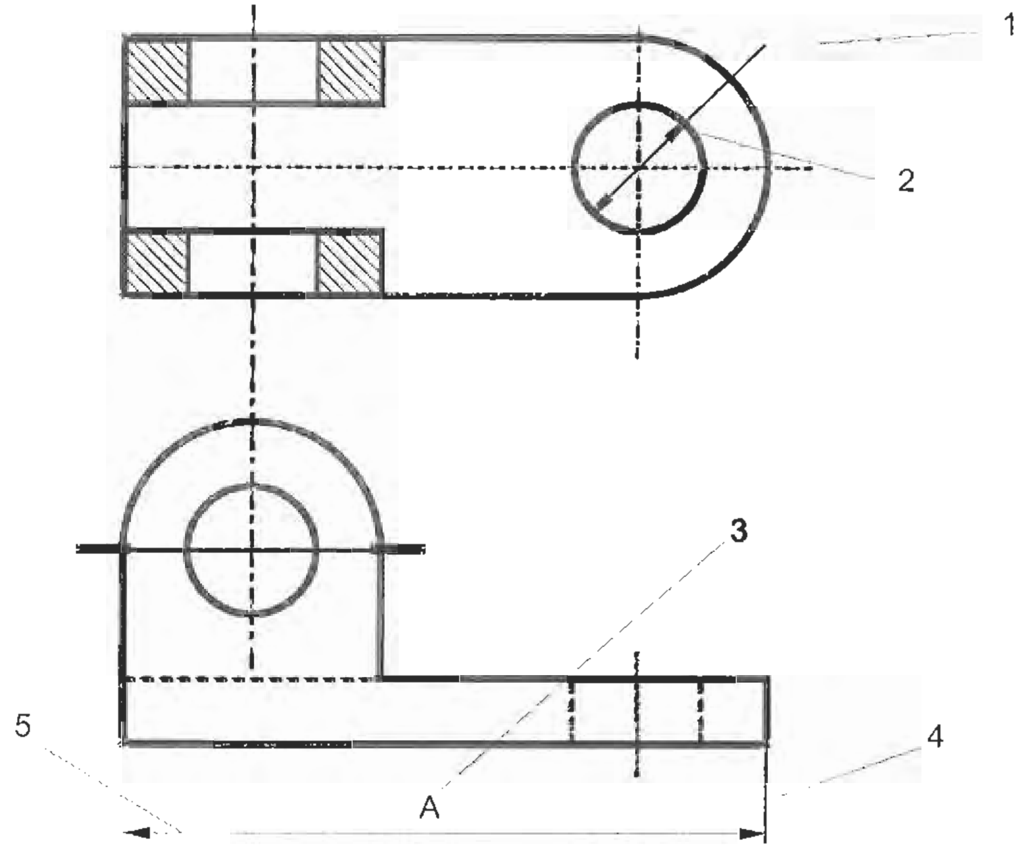

Fig. 4.9 Notation of dimensioning
1. Leader line 2. Arrow head 3. Dimension figure 4. Extension line 5. Dimension line

4.12 General rules for dimensioning

1. Dimensions should be placed outside the view as far as possible.
2. Dimension lines should not intersect each other.
3. Dimension lines should not be placed cutting an extension line.
4. Dimension should be given on the view which shows the relevant features most clearly.
5. Dimensions should never be crowded. If the space is not sufficient, arrow heads may be replaced by dots or inclined lines.

Fig. 4.10 Dimensioning methods

6. The distance between the outline of the object and the first dimension line should be at least 10mm.
7. A distance of atleast 8mm should be kept between two adjacent dimension lines.
8. The extension line should not project beyond 2mm from the dimension line.
9. Leader lines should be constructed at an angle to the horizontal (30^0, 45^0 and 60^0).
10. Centre lines should not be used as dimension line.
11. Dimensions with smaller sizes should be placed near the drawing than those with bigger sizes.
12. Dimensions marked in one view need not be repeated in other views.
13. While dimensioning angles, their values are placed outside the view.
14. Remarks, instructions and foot notes should be written horizontally.
15. Dimensions of parts which are not drawn to scale should be underlined. If the whole drawing is not drawn to scale, a note should be made in the drawing as 'NOT TO SCALE'.
16. When all the dimensions are in same unit, there is no need to mention the unit. Instead a foot note should be written as 'ALL DIMENSIONS ARE IN mm.'
17. The size of the datum plane should be written within brackets.
18. While dimensioning external threads, the type, size and length should be marked.
19. The size of a circle should be indicated by its diameter.

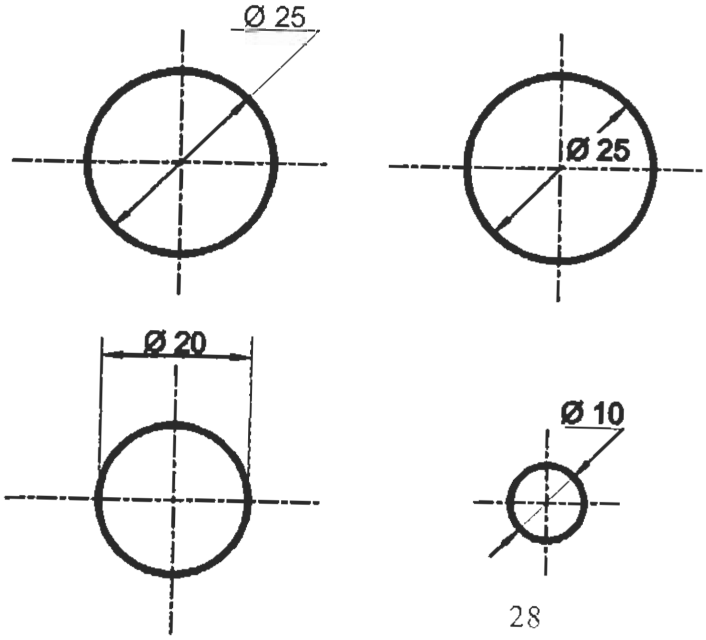

Fig. 4.11 Different methods of dimensioning circles

20. The size of the arcs should be indicated by its radius.

21. While marking the dimension of an arc, the dimension should be preceeded by a mark 'R'.

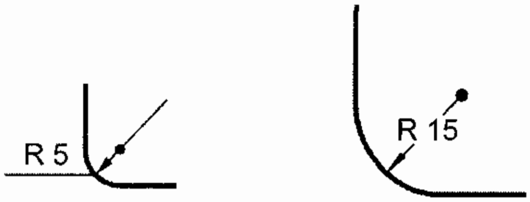

Fig. 4.12 Methods of dimensioning arcs

22. The dimension of spheres is done as shown below

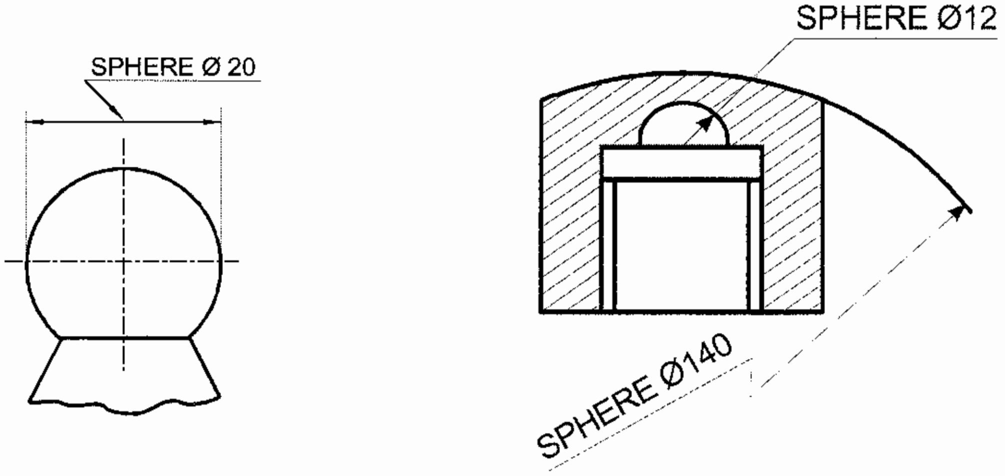

Fig. 4.13 Dimensioning spheres

23. The dimensions of holes may be made in the following methods

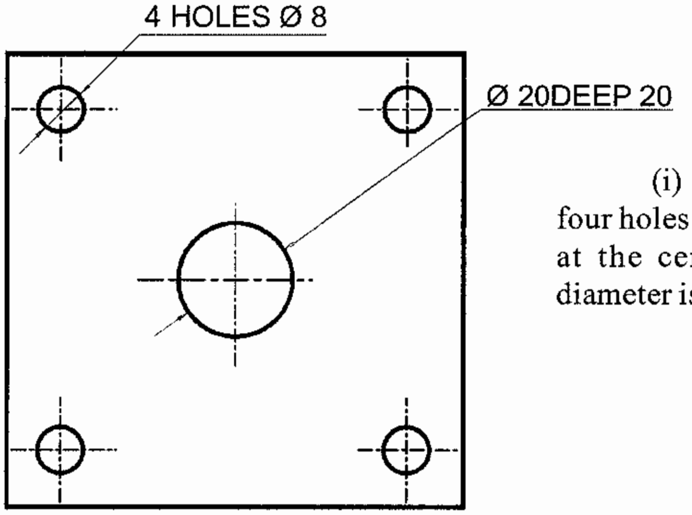

(i) It should be understood that the four holes are of 8mm diameter. The hole at the centre is 20mm deep and the diameter is 20mm.

Fig. 4.14
Dimensioning of holes

(ii) The hole on the left is 50mm deep and is of diameter 12mm. The other hole is a through hole of diameter 20mm.

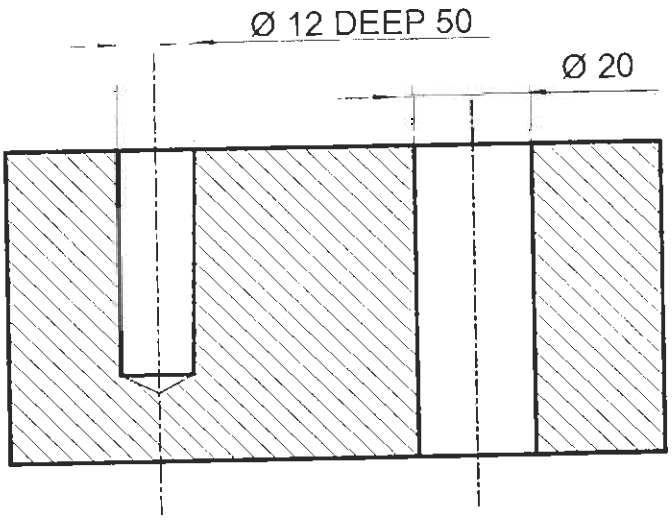

Fig. 4.15 Dimensioning of holes

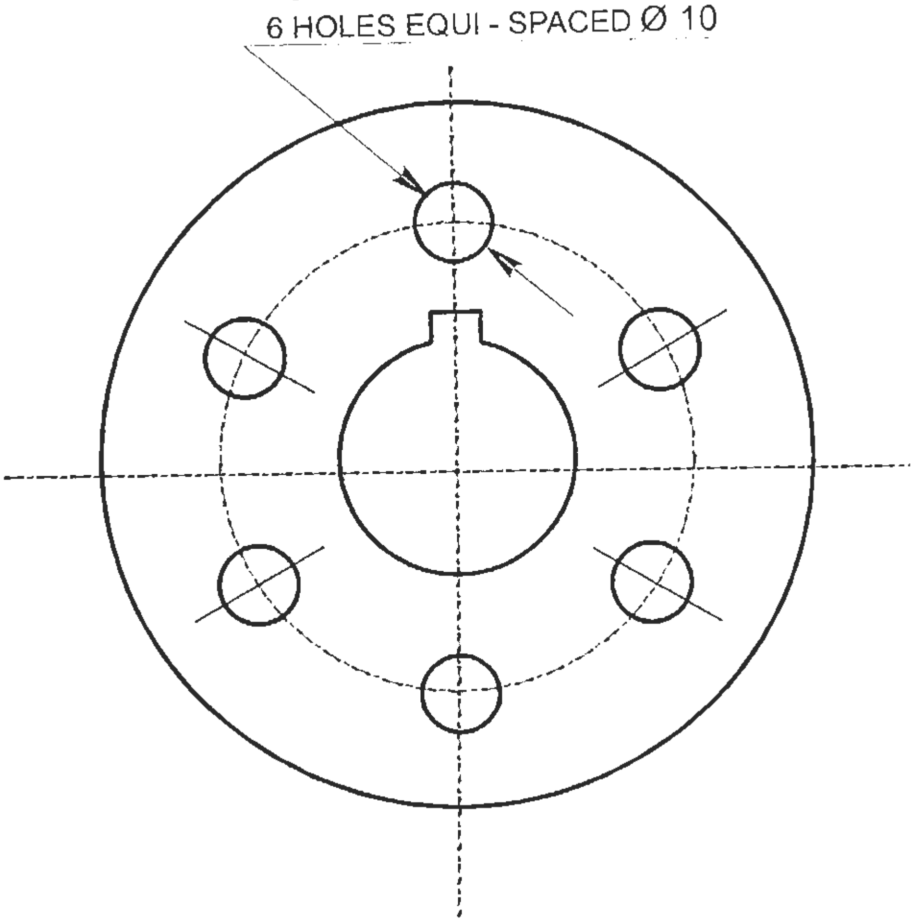

Fig. 4.16 Dimensioning of holes

(iii) The holes of equal size arranged on a circle at equidistance are dimensioned as shown above.

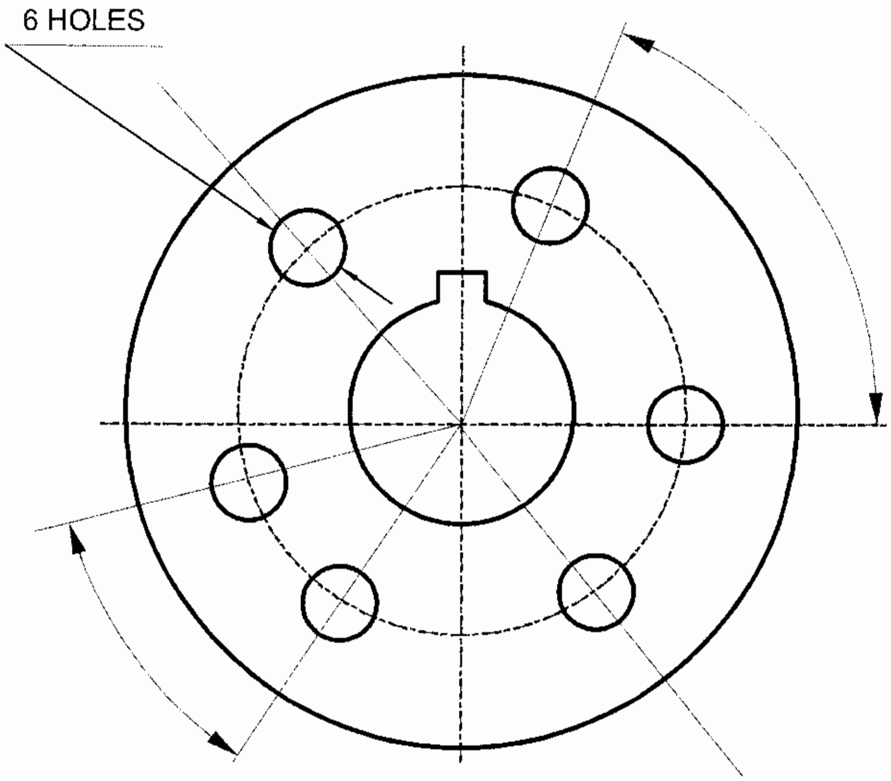

Fig. 4. 17 Dimensioning of holes

(iv) The holes of equal size arranged on a circle at unequal distances from each other are dimensioned as shown above.

24. Countersinking is the enlargement of the top of the hole conically. Countersinking is dimensioned as shown in the following diagrams.

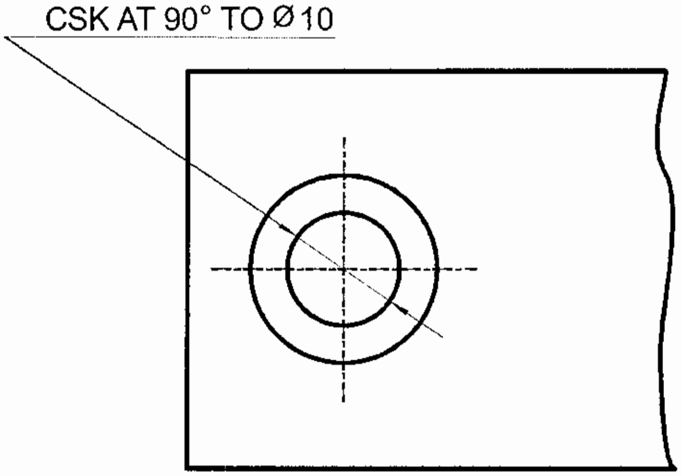

Fig. 4.18 Dimensioning a countersunk hole

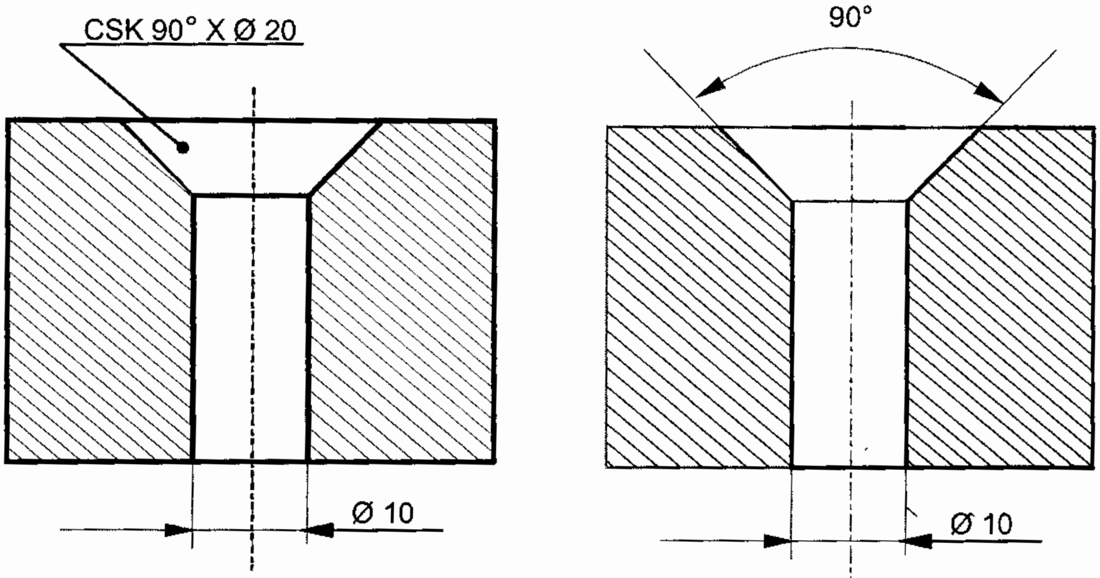

Fig. 4.19 Dimensioning a countersunk hole

25. Counterboring is the enlargement of the top of the hole cylindrically. Counterboring is dimensioned as shown in the following diagrams.

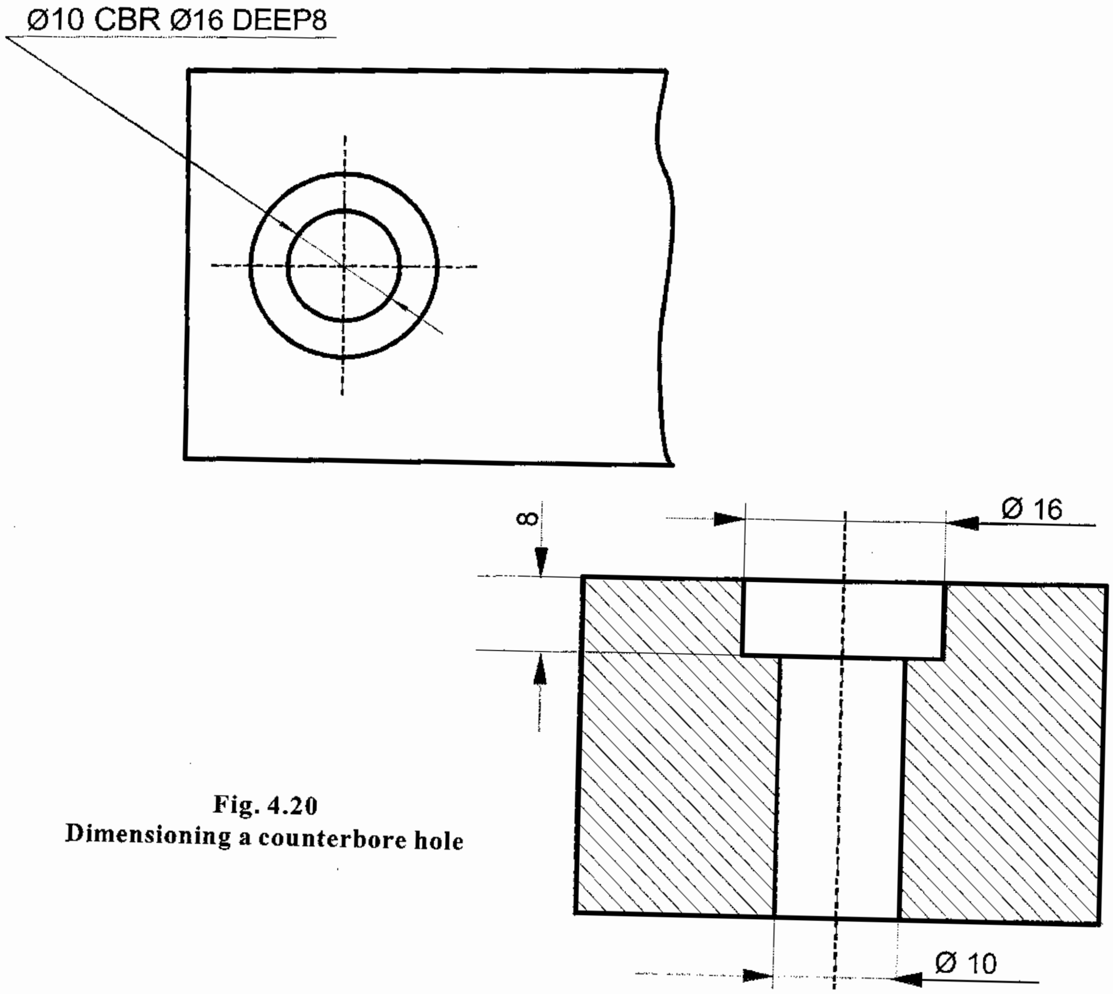

Fig. 4.20
Dimensioning a counterbore hole

26. Chamfering is done at the ends of cylindrical parts and parts having cylindrical holes. Chamfering is dimensioned as shown in the following diagrams.

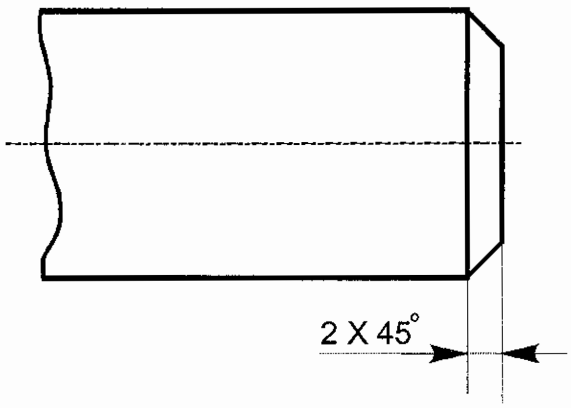

Fig. 4.21 Dimensioning a external chamfer

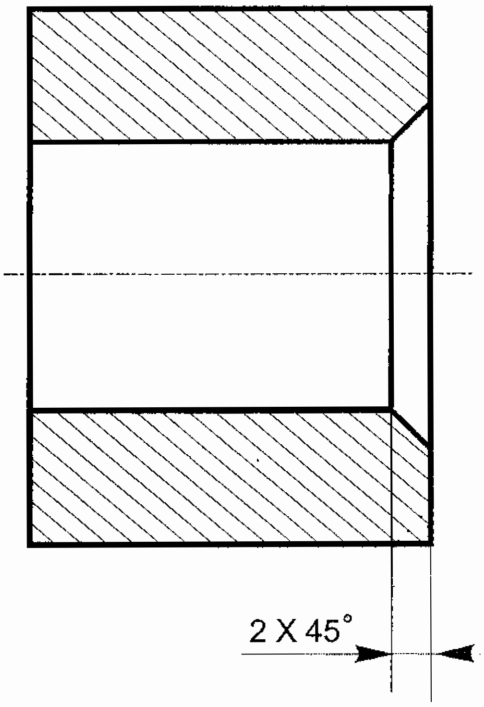

Fig. 4.22 Dimensioning a internal chamfer

27. Square and hexagonal profiles are dimensioned as shown in the diagrams below

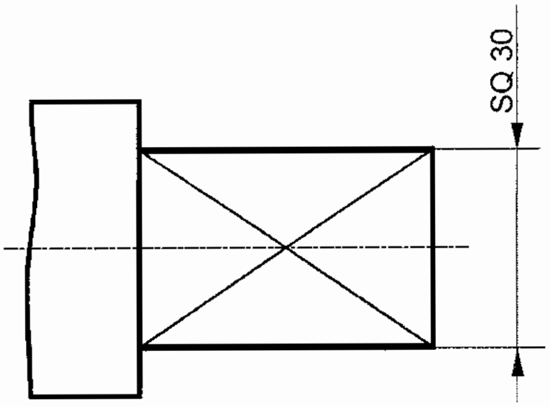

Fig. 4.23 Dimensioning a square profile

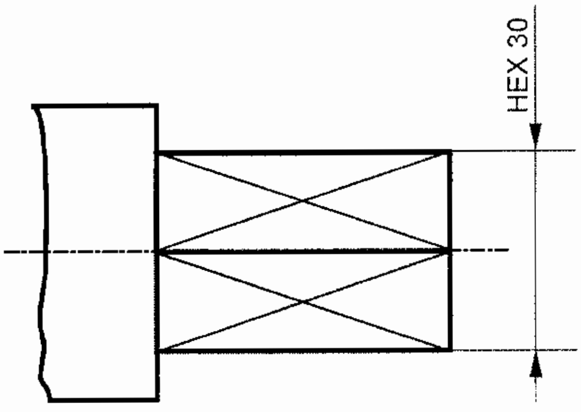

Fig. 4. 24 Dimensioning a hexagonal profile

28. Tapered profiles are dimensioned as shown in the diagram

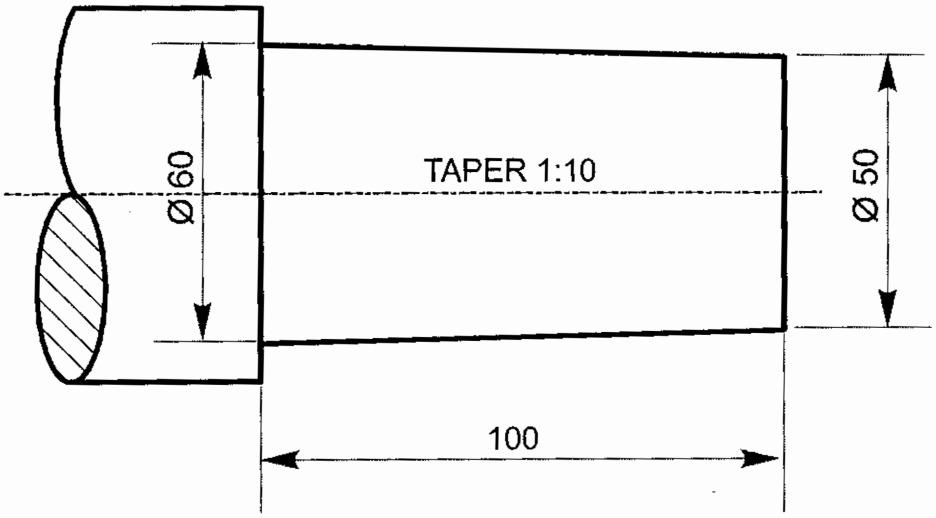

Fig. 4.25 Dimensioning a tapered profile

4.13 Incorrect and correct methods of dimensioning

In the previous section, guidelines are given regarding proper dimensioning of some important profiles. However, there are chances that dimensions may not be repressented in a correct way. Some examples are given in the next few pages to highlight the situations where dimensions are misrepresented frequently and to correct them.

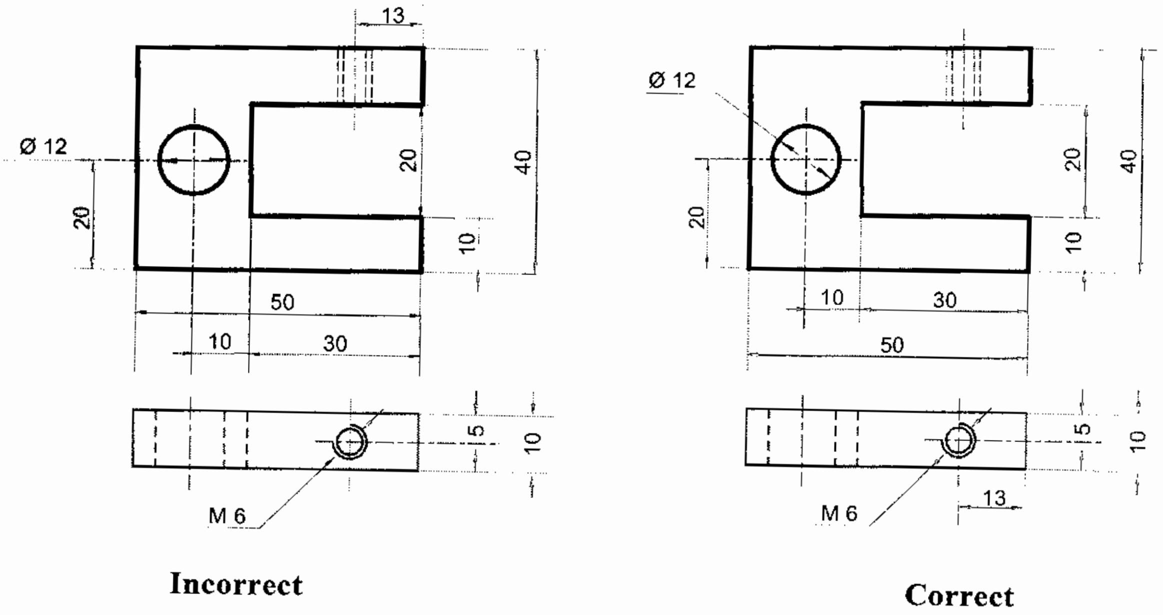

Fig. 4. 26

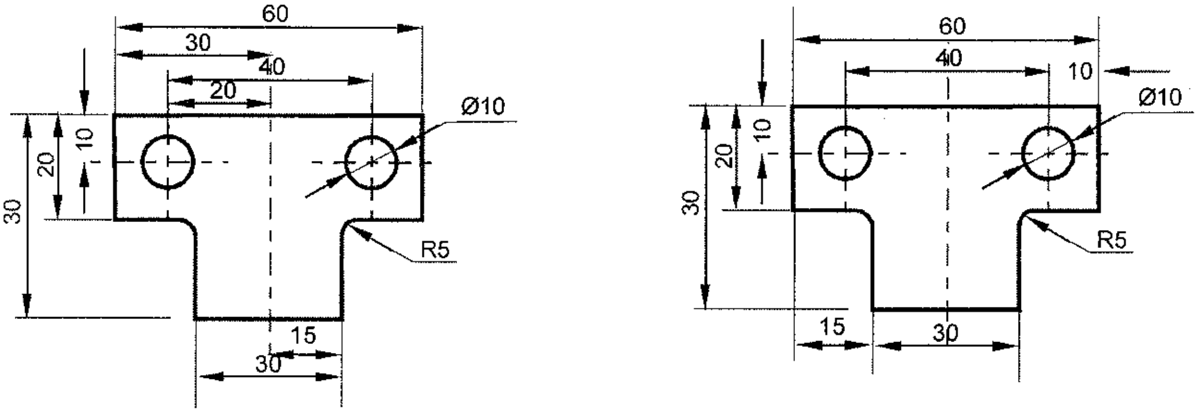

Incorrect **Correct**

Fig. 4.27

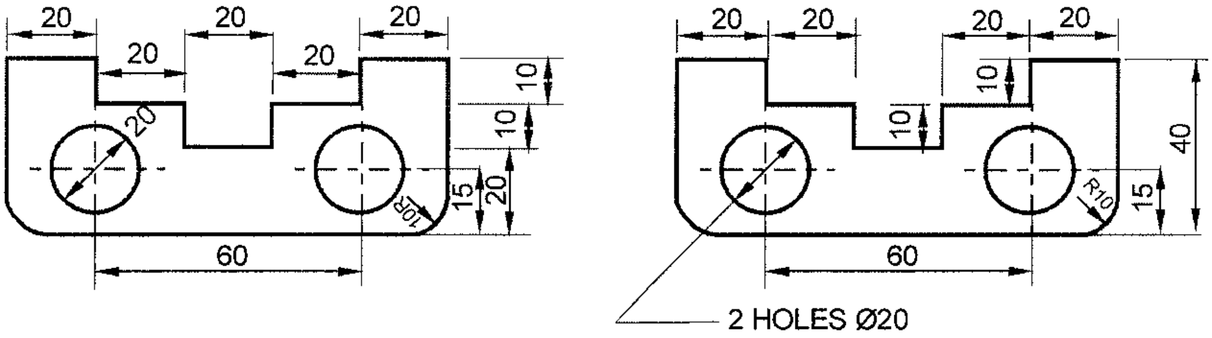

Incorrect **Correct**

Fig. 4.28

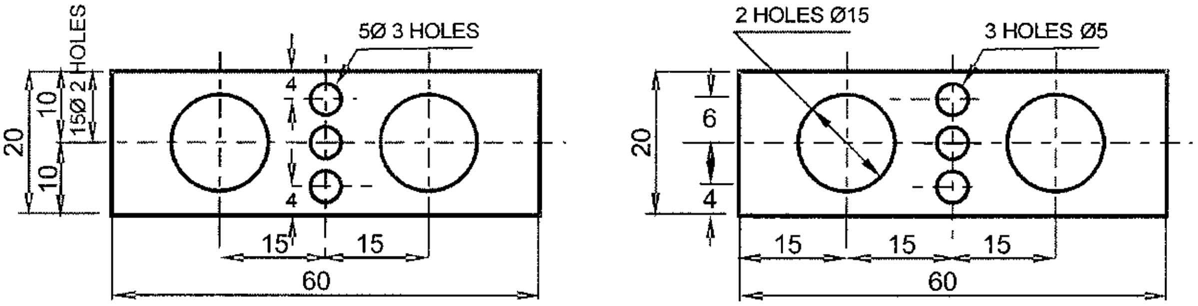

Incorrect **Correct**

Fig. 4.29

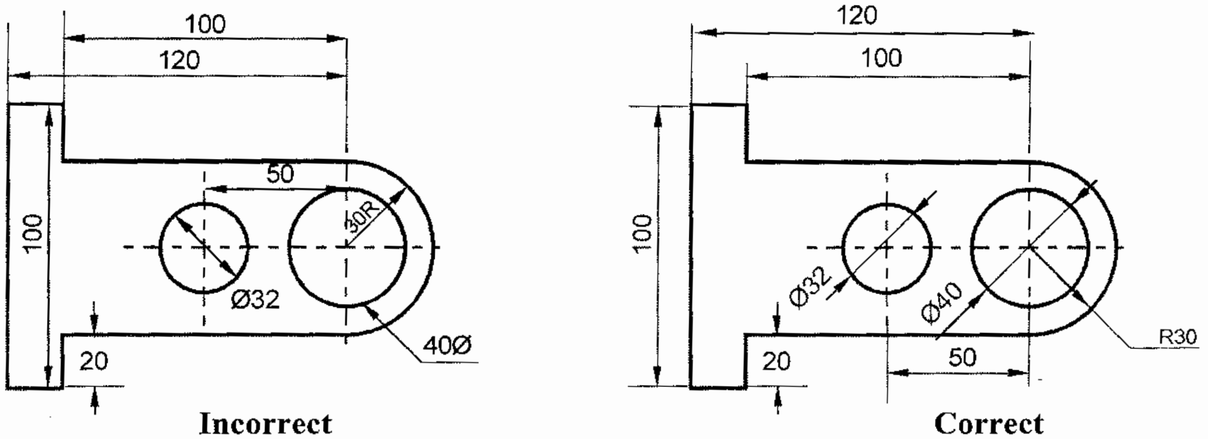

Incorrect **Correct**

Fig. 4.30

Exercise

Some exercises are given to correct the misrepresented dimensioning

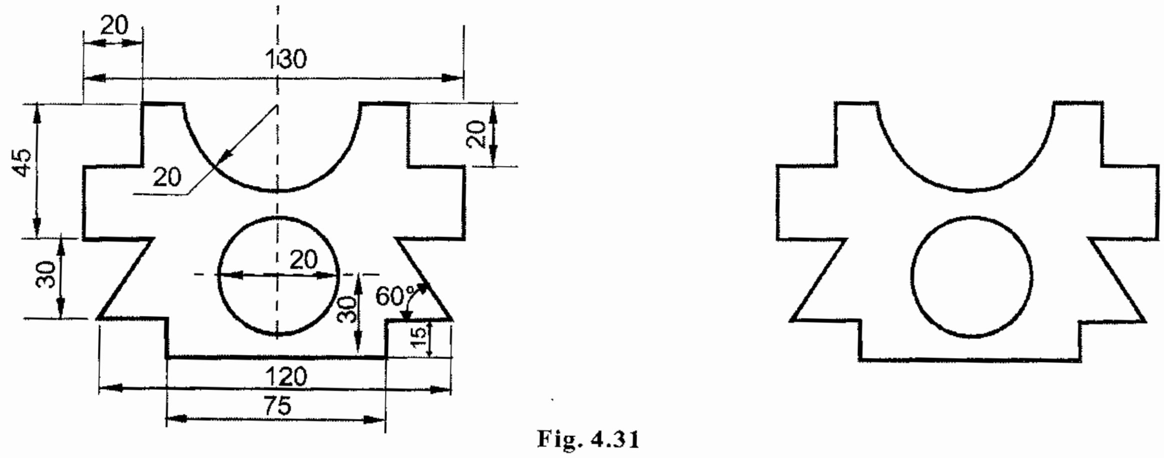

Fig. 4.31

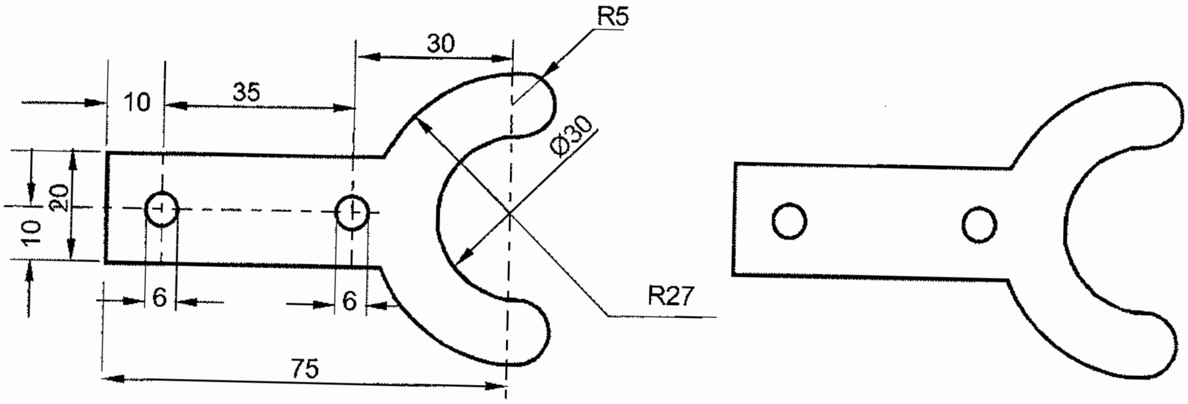

Fig. 4.32

Correct the misrepresented dimensioning

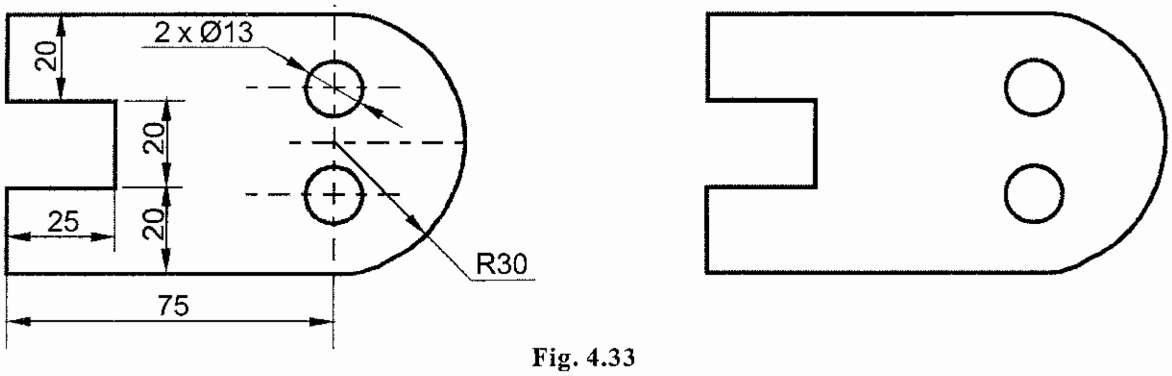

Fig. 4.33

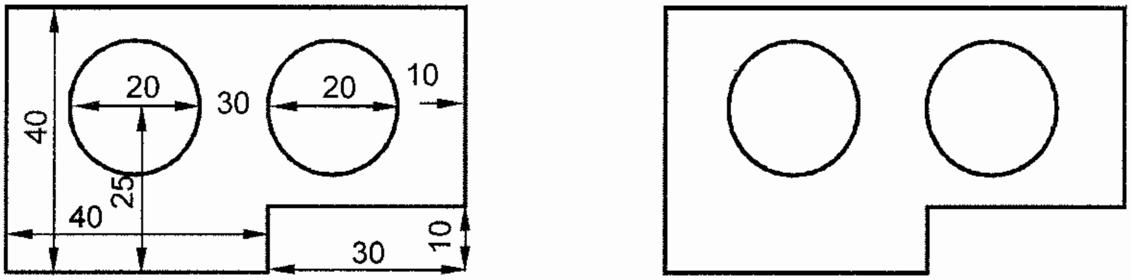

Fig. 4.34

QUESTIONS

I . Choose the correct option

1. The size of letters in the title of the drawing is
   a. 10mm b. 6mm c. 3mm d. 2mm

2. Gothic lettering
   a. is done by writing alphabets with uniform thickness
   b. is done with calligraphic nibs
   c. has shortened width with respect to its height
   d. has more width and normal height

3. The method of placing dimensions parallel and above the dimension lines is
   a. aligned system b. leader line method
   c. extension line method d. unidirectional system

4. The length and width of the arrow head should be in the ratio
   a. 2:1 b. 1:2 c. 3:1 d. 5:2

II. Answer the following questions in one or two sentences

1. What are the main features of lettering ?
2. What are the types of letters ?
3. What do you mean by inclined letters ?
4. What is dimensioning ?
5. What is size dimension ?
6. What is locating dimension ?
7. What is aligned system of dimensioning ?
8. Draw the methods of dimensioning circles.

III. Answer the following questions in about a page

1. What do you mean by size of letters? Explain.
2. Draw different types of lines and specify their applications.
3. Briefly discuss the instructions for correct dimensioning.

5. GEOMETRICAL CURVES

5.1 Introduction

In engineering drawing, it is very important know to how to construct plane curves and special curves as these profiles are useful in representing shapes of various components. They are also useful in the study of some engineering parameters. These geometrical curves can be learnt under two headings.

1) Conics (or) Conical Sections

2) Special Curves

5.2 Conical sections

The sections obtained by the intersection of a right circular cone by a cutting plane at different position to the axis of the cone are called conical sections. They can also be called as conics.

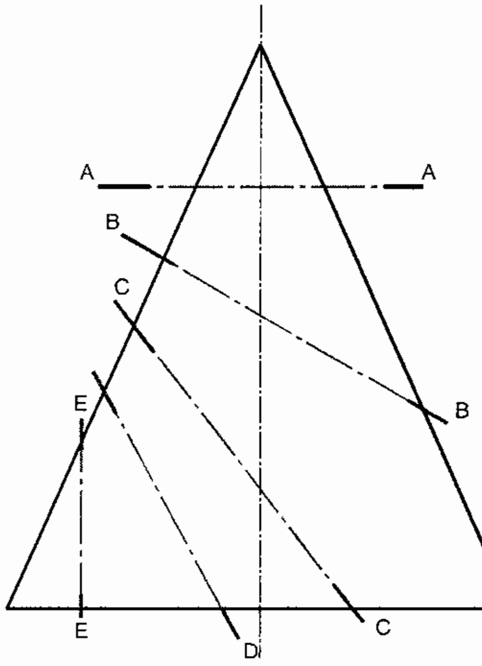

Fig. 5.1 Cutting planes at different angles to the axis of a right circular cone
AA - Circle BB - Ellipse CC - Parabola DD - Hyperbola EE - Rectangular hyperbola

5.2.1 Right circular cone

If the base of a cone is perpendicular to its axis then the cone is called right circular cone. The top most point of the cone is called apex. The axis of the cone is an imaginary line joining the apex and the centre of the base circle. The lines joining the apex and the circumference of the base circle are known as generators.

5.2.2 Circle

When the cutting plane is perpendicular to the axis and cuts all the generators, the obtained section is a circle.

5.2.3. Ellipse

If a section is obtained by allowing the cutting plane at an angle to the axis of the cone cutting all generators, the section is an ellipse.

5.2.4 Parabola

If the cutting plane is inclined to the axis of the cone and parallel to one of the generators, the resultant section is a parabola.

5.2.5 Hyperbola

When the cutting plane cuts the cone such that its angle of inclination with the axis of the cone is smaller than the angle made by the generator of the cone, the obtained section is hyperbola

5.2.6 Rectangular Hypabola

When the cutting plane is parallel to the axis of the cone, the resultant section is a rectangular hyperbola.

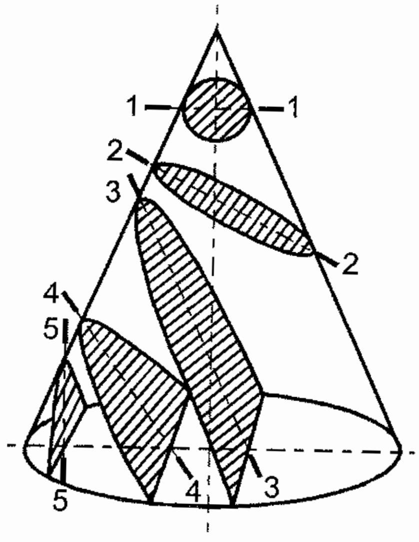

Fig. 5.2 Curves obtained by cutting a right circular cone at different angles

1-1 Circle

2-2 Ellipse

3-3 Parabola

4-4 Hyperbola

5-5 Rectangular hyperbola

5.3. Mathematical definitions of conical sections

5.3.1 Conic

Conic can be defined as the locus of a moving point in a plane such that the ratio between its distance from a fixed point and a fixed straight line is a constant. This ratio is known as eccentricity.

5.3.2 Focus

The fixed point with respect to each of the conics is known as focus (F)

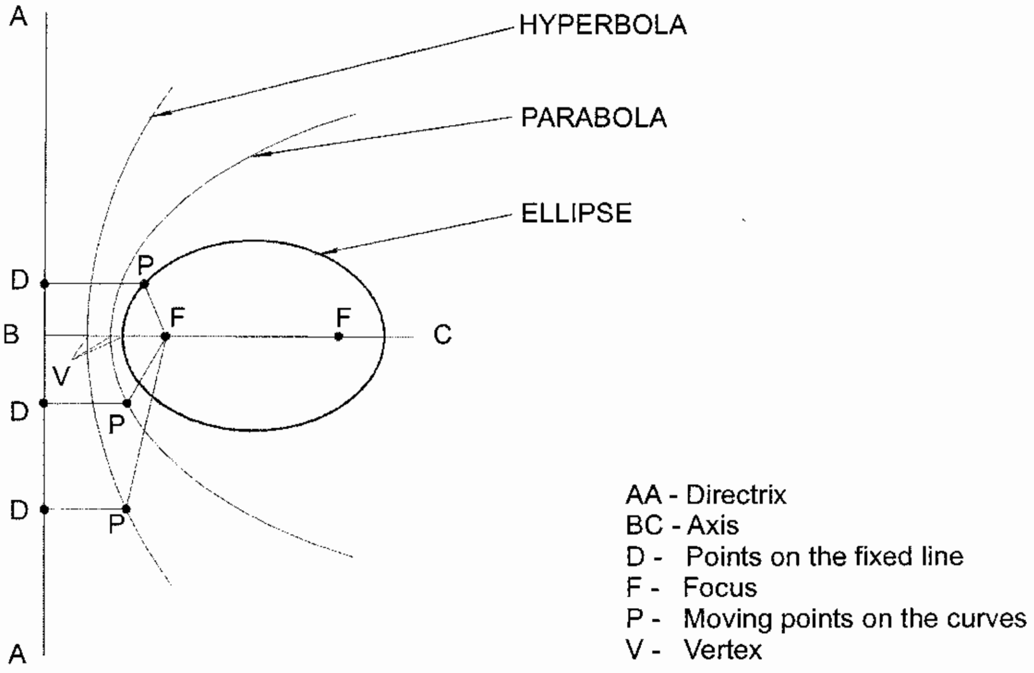

Fig. 5.3 Mathematical representation of conical sections

5.3.3 Directrix

The fixed straight line regarding all these conics is known as directrix.

5.3.4 Eccentricity

$$\text{Eccentricity} = \frac{\text{Distance of the moving point from the focus}}{\text{Distance of the moving point from the directrix}}$$

5.3.5 Axis

The line passing through the focus and perpendicular to directrix is called axis.

5.3.6 Vertex

The point at which the conic cuts the axis in known as vertex.

5.3.7 Ellipse

Ellipse is the curve generated by a point moving in such a way the ratio of the distance from the fixed point (Focus) to its distance from the fixed straight line is a constant. The ratio is always is less than 1 (directrix).

5.3.8 Parabola

Parabola is the curve generated by a point moving in a plane in such a way that the ratio of its distance from the fixed point to its distance from the fixed straight line is a constant and is always equal to 1.

5.3.9 Hyperbola

Hyperbola is a curve generated by a point moving in such a way that the ratio between the distance from the fixed point and its distance from the fixed straight line is a constant and is greater than 1.

5.4 Construction of Ellipse

The methods of constructing ellipse are

1) Concentric circles methods

2) Rectangle method

3) Parallelogram method

4) Eccentricity method

4) Pin and string method

6) Trammel method

5.4.1 Concentric circle method

For constructing an ellipse by concentric circles method, only the major axis and the minor axis dimensions are given.

Two perpendicular lines AB and CD are drawn representing the dimensions of major axis and minor axis generally by keeping the major axis in horizontal position. With the point of intersection of these lines as centre (O), two concentric circles are drawn with major axis and minor axis as their diameters.

The circumference of these circles are divided into 12 or 16 equal parts and radial lines are drawn though these points. The radial lines interact the two circles at 1, 2, 3, - - - - - - - 12 and 1', 2', 3', - - - - - - - - - 12'.

Vertical lines are constructed through the points 1, 2, 3, - - - - - - — - - 12 and horizontal lines are drawn through 1', 2', 3', - - - - - - - - 12'. These pairs of lines intersect to get points P_1, P_2, P_3, - - - - - - - - - P_{12} though which a smooth curve of ellipse is drawn.

Constructing an ellipse with major axis 100mm and minor axis 60mm.

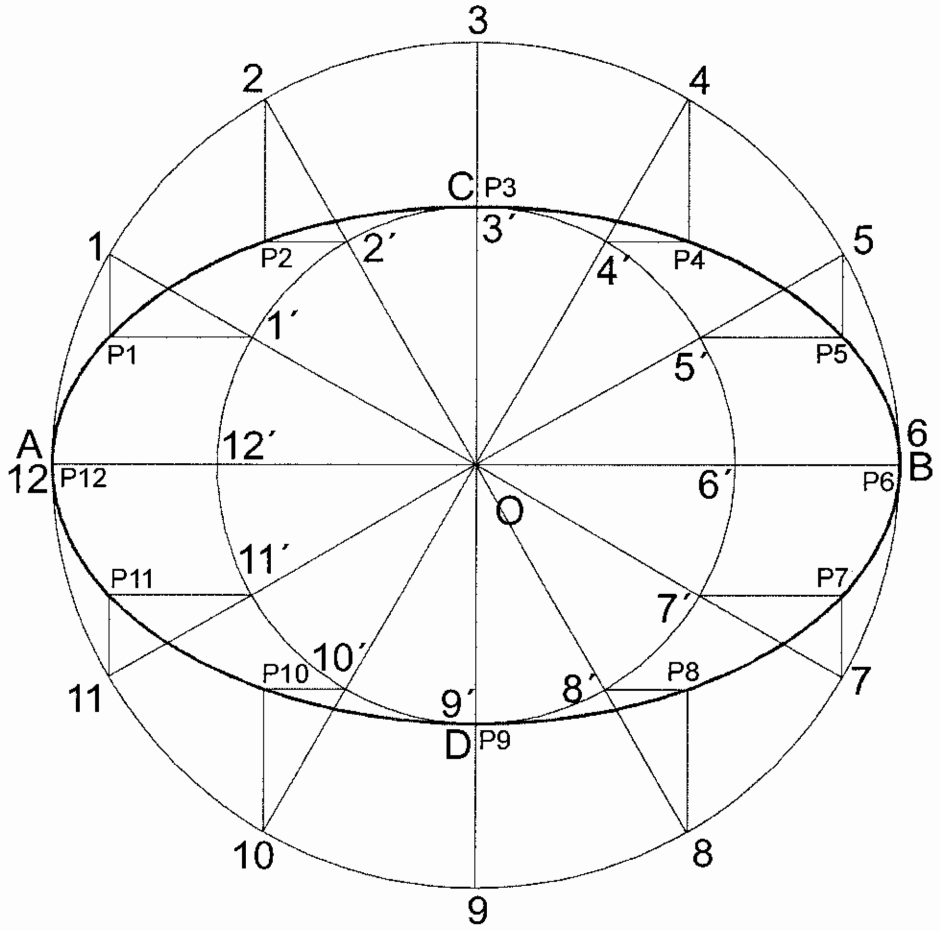

Fig 5.4 Construction of ellipse by concentric circles method

5.4.2. Rectangle Method

Constructing an ellipse by rectangle method involves the dimensions of major and minor axis.

Two perpendicular lines (AB & CD) are drawn measuring major axis and minor axis so that they bisect each other at a point O. Through the terminal points of the major axis (A & B) two lines parallel to CD (PQ & RS) are drawn. Another pair of lines parallel to AB (QR & PS) are drawn through the terminal points of the minor axis (C & D). A rectangle PQRS is obtained.

AB = PS = QR and CD = QP = RS. AQ is divided into 4 equal parts and named as 1, 2, 3. AO is also divided into same number of equal parts (4) & named as 1_1, 2_1, 3_1. Lines are drawn from D connecting the points 1, 2, & 3. C 1_1 is drawn and extended to meet D1 at P_1. Similarly $C2_1$ and $C3_1$ are drawn and extended to get points P_2 and P_3. A smooth curve is drawn through the points A, P_1, P_2, P_3 and D.

The same procedure is followed on all the three other quarter of the rectangle PQRS and the ellipse of given dimensions is obtained.

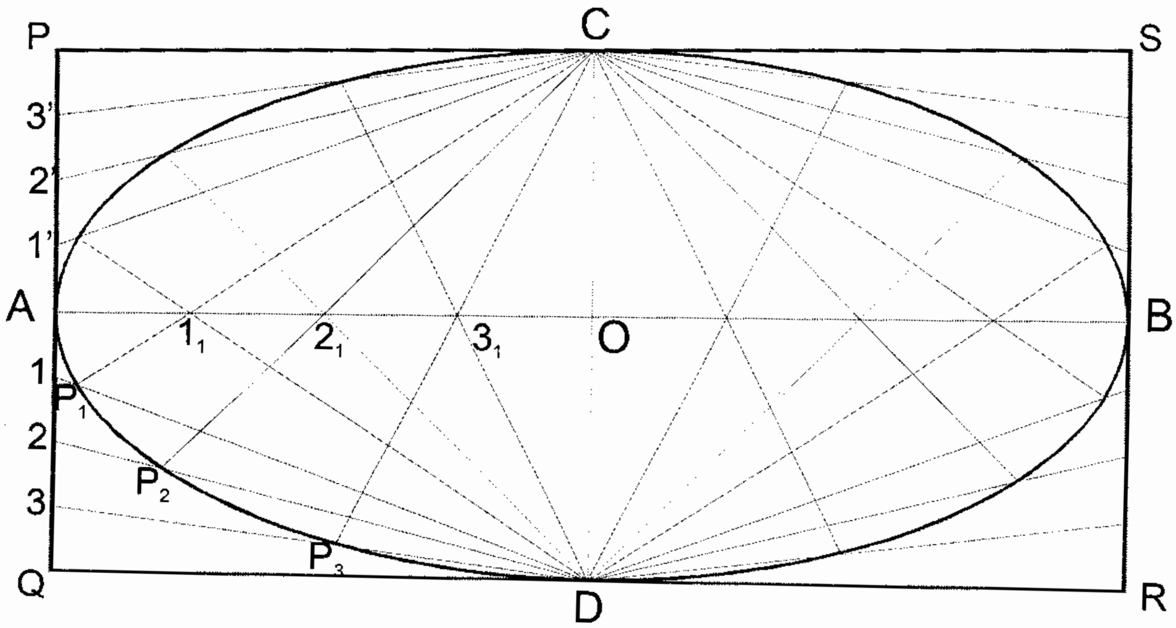

Fig 5.5 Construction of ellipse by rectangle method

5.4.3 Engineering applications of ellipse

The curve of ellipse can be used for

- Concrete arches
- Stone bridges
- Glands
- Stuffing boxes
- Reflectors used in automobiles

5.5 Special curves

Apart from practising to construct conical sections, an aspiring engineer at this level needs to know about some special curves. Cycloids, Trochoids, Involutes and Spirals are some curves which find engineering application.

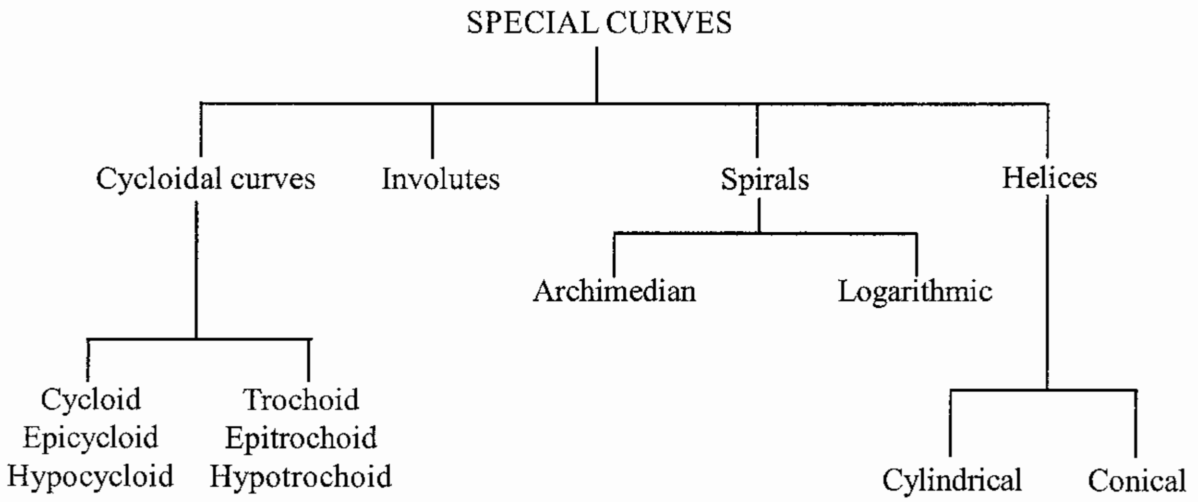

Classifications of special curves

5.5.1 Cycloidal curves

Cycloidal curve is made by a fixed point on the circumference of a circle when rolled along a fixed straight line or a circle without slipping.

Cycloidal curves are : 1) Cycloid 2) Epicycloid 3) Hypocycloid

When a circle is rolled without slipping on a straight line, the curve generated by a point on the circle is known as **cycloid**.

When a circle (generating circle) is rolled without slipping on another circle (directing circle), the curve generated by a point on the generating circle is called **epicycloid**.

When a circle (generating circle) is rolled without slipping on the inside of another circle (directing circle), the curve generated by a point on the generating circle is known as **hypocycloid**.

5.5.2 Involute

Involute is a curve generated by a point on a piece of thread when it is unwound from a geometrical shape. The thread (or) string is kept tight when it is unwound. The gemotrical shape may be a circle, a triangle or a polygon. The involute of a circle is known as evolute.

5.5.3 Spirals

Spiral is a curve generated by a point which moves around a centre called pole while moving towards or away from the centre.

5.5.4 Helix

Helix is a curve generated by a point moving around and along the surface of a right circuular cone with a uniform angular velocity about the axis and with a uniform linear velocity in the direction of the axis.

5.6 Surfaces

An object may have a combination of surfaces of different types. They may be simple as flat surfaces or complicated like the surface of an asbestas roofing sheet. The different types of surfaces are

I. Flat surface

a. Horizontal surface　　b. Vertical surface　　c. Inclined surface

II. Spherical surface

a. Concave surface　　b. Convex surface

5.6.1. Flat surface

A flat surface is free from any irregularities. A flat surface may be horizontal, vertical or inclined.

Example : Surfaces of walls, floorings in the house and surfaces of the slides that children play

Horizontal surface :

A flat surface which is horizontal is known as horizontal surface. The top surface of the table and floors of buildings are some examples of horizontal surface.

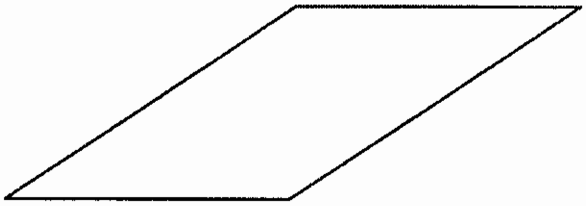

Fig. 5.6 Horizontal surface

Vertical surface :

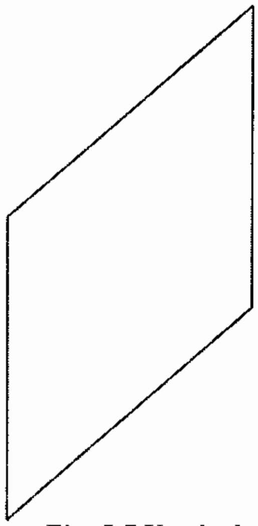

Fig. 5.7 Vertical surface

A flat surface which is perpendicular to the horizontal surface is called vertical surface. The walls of rooms and the sides of doors are some examples for vertical surfaces.

Inclined surface :

A surface which is neither horizontal nor vertical and inclined at any angle between them is known as inclined surface. The surface of the play slides is a vertical surface.

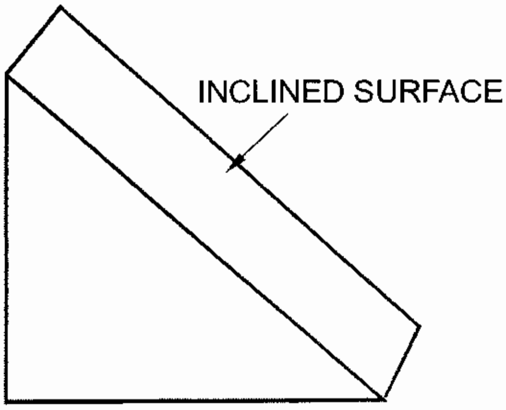

Fig. 5.8 Inclined surface

5.6.2 Spherical surface

Both concave and convex surfaces are categorised as spherical surfaces.

Concave surface

The surface which is curved inside spherically is known as concave surface. The inner surfaces of the decorative arches are examples of concave surface.

Fig. 5.9 Spherical surface

A - Concave surface B - Convex surface

Convex surface

The surface which is curved outside spherically is known as concave surface. The outer surface of a rubber ball is an example of convex surface.

5.6.3 Parabolic surface

A parabola is a curve obtained when a cutting plane inclined to the axis of the cone and parallel to one of the generators cuts a right circular cone. A surface resembling a parabola is known as parabolic surface. The reflectors of automobiles is an example of parabolic surface.

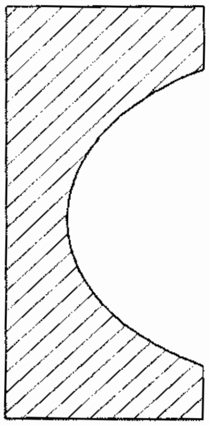

Fig. 5.10 Parabolic surface

QUESTIONS

I A. Choose the correct option

1. The surface of a wall is

   a. irreglar surface b. vertical surface

   c. horizontal surface d. inclined surface

2. The surface of the sectioned rubber ball will be

   a. irreglar surface b. concave surface

   c. convex surface d. flat surface

I B. Answer the following questions in one or two words

1. What is the name of the surface at right angles to the horizontal surface?
2. What is the name of the surface of the reflector of automobiles?

II . Answer the following questions in one or two sentences

1. What do you mean by conics ?
2. What is an ellipse ?
3. Mention the types of flat surfaces.
4. What are the types of spherical surfaces ?
5. What do you mean by corrugated surface ?

III. Answer the following questions in about a page

1. Explain the curves obtained by sectioning a right circular cone by cutting planes at different angles to its axis.
2. Explain - Flat surface, Horizontal surface, Vertical surface and Inclined surface

6. SCALE OF A DRAWING

6.1 Introduction

It is now our knowledge that drawings are made to show all the details of objects clearly. But, it is not always possible to show the objects on a drawing sheets in actual sizes. For example, large machine parts cannot be represented on a drawing sheet in its original size. Hence, it is necessary to reduce the size of the object in a fixed proportion to show it in a drawing. At the same time, it is necessary to increase the size of the object in some cases to give a clear description of the object.

In both cases, a proportion is used either to reduce or increase the dimensions of the object. So the proposition by which the actual size of the object is reduced or increased on a drawing is known as **scale of a drawing.**

Scales are usually made of celluloid, card board, wood or metal. They are actually rulers on which different propositions are represented to make drawings of objects having different range of dimensions. As far as possible, standard scales are adopted in making drawings. The standard scales are designated as M1, M2, M3 - - - - - - - - - M8 as explained in chapter 2 (2.6). When standard scales are not suitable for making a particular drawing, scales in required proposition can be constructed.

6.2 Uses of Scales

The important uses of scales are

1) Scales are useful in making reduced size and enlarged size drawings.
2) Dimensions are set off on drawings when the scale used is indicated in the title block of the drawing.
3) The dimensions of various parts can be measured directly.

6.3 Types of Scales

There are three types of scales according to the proportions made on them.

1) Full size scale
2) Reducing scale
3) Enlarging scale

6.3.1 Full size scale

When the measurements of objects are shown on a drawing in its actual sizes, the scale used in the drawing is full size scale. *Full size scale is indicated as 1: 1*

6.3.2 Reducing scale

When the size of the object is too large to be accommodated on a drawing sheet, the dimensions of the object are reduced in a particular proportion and represented in the drawing. This scale is known as reducing scale. *Eg:- 1 : 2, 1: 5 & 1 : 10*

6.3.3 Enlarging scale

When the size of the object to be shown on the drawing sheet is very small to give clear description about the object, the dimensions of the object are enlarged in a particular proportion. This scale is called enlarging scale. *Eg:- 2 : 1, 5 : 1, 10 : 1.*

6.4 Units used in measuring dimensions

In this context it is important to know the units which are in use to measure dimensions in metric system.

6.4.1 Units for measuring linear dimensions

10 Millimeters (mm)	= 1 Centimeter (cm)
10 Centimeters	= 1 Decimeter (dm)
10 Decimeters	= 1 Meter (M)
10 Meters	= 1 Decameter (dam)
10 Decameters	= 1 Hectometer (hm)
10 Hectometers	= 1 Kilometer (km)

6.4.2 Units for measuring area

100 Square Millimeters (mm^2)	= 1 Square Centimeter (cm^2)
100 Square Centimeters	= 1 Square Decimeter (dm^2)
100 Square Decimeters	= 1 Square Meter (m^2)

6.4.3 Units for measuring volume

1000 Cubic Millimeters (mm^3)	= 1 Cubic Centimeter (cm^3)
1000 Cubic Centimeter	= 1 Cubic Decimeter (dm^3)
1000 Cubic Decimeter	= 1 Cubic Meter (m^3)

6.5 Representative Fraction (R. F)

Representative Fraction is the ratio of the distance of the object on the drawing to the corresponding actual dimension of the object in same units.

$$\text{R. F} = \frac{\text{Distance on the drawing of an object}}{\text{Corresponding actual dimension of the object}}$$

To calculate Representative Fraction of a drawing when 1 centimeter on the drawing represents 1 meter in actual size.

$$\text{R. F} = \frac{\text{Distance on the drawing of and object}}{\text{Corresponding actual dimension of the object}}$$

$$= \frac{1}{1 \text{ X } 10 \text{ X } 10} = \frac{1}{100} = 1 : 100$$

In constructing scales calculating the Representative Fraction (R. F) is very important.

6.6 Necessary informations required for constructing scales

As explained in section 6.1, when the required scale is not found in the standard set of scales, the same has to be constructed. While doing so, the following informations are necessary.

1) Representative Fraction (R. F)

2) Maximum length of the scale

3) Units to be represented in the scale

The maximum length of the scale is determined in such way that it is slightly longer than the maximum dimension that is going to be represented in the drawing.

Dimensions may be measured in same units all through the drawings. Some times, they are measured in two or three units. (like centimeters, decimeters and meters). In some other cases, it may be unit and a fraction of the same unit.

6.7 Classification of scales

Depending on the requirement of size and units that are to be represented, different types of scales are used. They are classified as

1. Plain scale
2. Diagonal scale
3. Comparative scale
4. Vernier scale
5. Scale of chords

6.7.1 Plain scale

Plain scale is a line which is divided into suitable number of equal parts or units, the first part of which is further divided into small parts or sub-units of main unit. Plain scales are used to represent two units or one unit and its fraction. For example

i) kilometers and hectometers
ii) meters and decimeters
iii) centimeter and millimeter

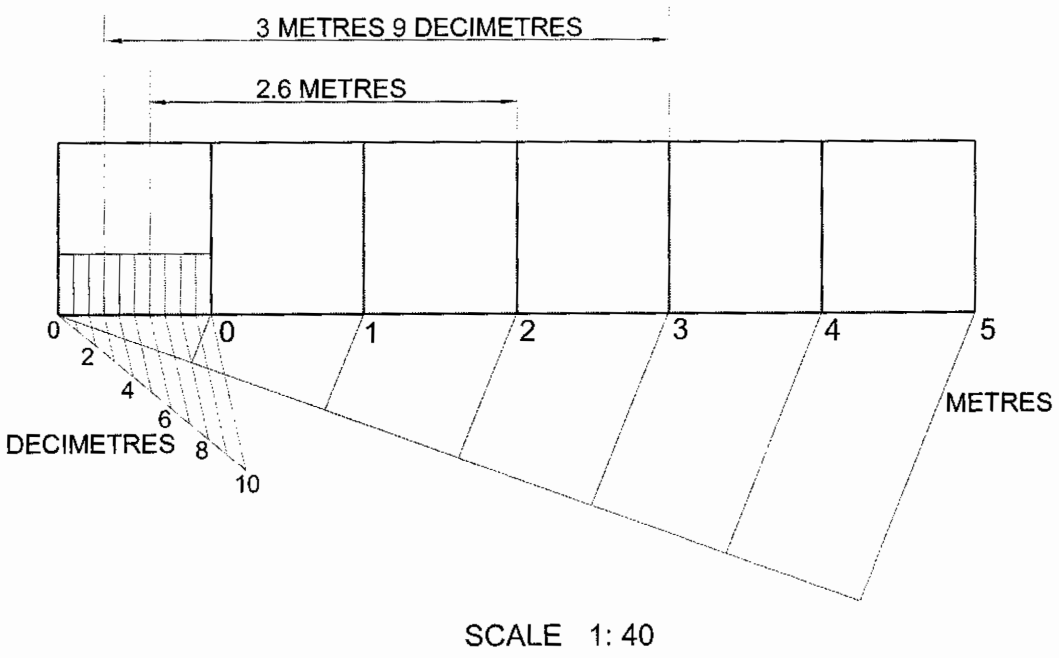

Fig 6.1 A sample plain scale

In the sample scale shown above, an actual distance of 40 units is representated as 1 unit in the scale. The units of decimeters and meters are shown.

6.7.2 Diagonal Scale

Diagonal scale is similar to a plain scale except that the first part which is divided into small part is further divided to represent a third small unit or the decimal of the second unit. Diagonal scales are used to represent three units of dimensions like meter, decimeter and centimeters. They can also be used to represent two units and a fraction of the second unit.

6.7.3 Scale of chords

It is used to make out or to measure angles of any measurement

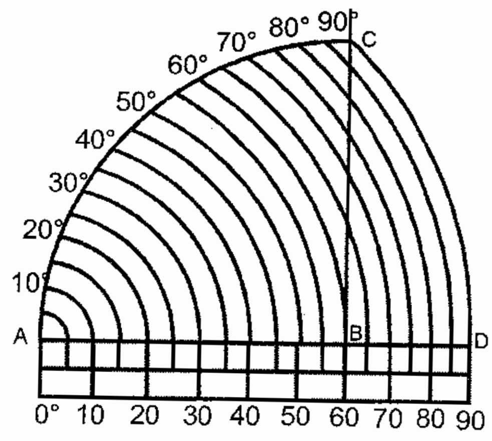

Fig 6.2 Scale of chords

QUESTIONS

I. Answer the following questions in one or two words

1. What is the name of the scale when the measurements of an object are shown on a drawing in its actual sizes?
2. What do you mean by plain scale?
3. Mention any one type of a scale.
4. What is the ratio of the scale when the distance on a drawing is twice that of the actual size?

II. Answer the following questions in one or two lines

1. What is scale of a drawing ?
2. What are the important uses of scales ?
3. What are the types of scales ?
4. How are scales classified ?
5. What is Respresentative Fraction (R.F.) ?

III. Answer the following questions in about a page

1. Explain the types of scales.
2. How are scales classified ? Explain.

7. THEORY OF PROJECTION

7.1 Introduction

In the introductory chapter, it was explained that the need of the drawing is to communicate the ideas and informations regarding an object between a number of engineers and operators in the fields of designing, developing, manufacturing and marketing. As regards to solid geometric drawing, there is the necessity of presenting the informations about a three dimensional object on a two dimensional plane of paper. In overcoming this difficulty, the views of the objects are represented pictorially. Apart from pictorial drawings, the information about the object can be represented in more than one view arranged in a specified order. In general, obtaining the views of the object on a drawing sheet is known as **projection** and procedures and rules involved in the process are known as **theory of projection.**

7.2 Theory of projection

In engineering drawing, the exact shape and size of an object should be shown on a two dimensional plane of paper. For doing so, the object is imagined to be located between the observer and the plane on which the view is going to be obtained. Straight lines are drawn from different points on the contour of the object to meet the plane of paper. The points obtained on the sheet of paper are joined in proper sequence to form the image or view of the object.

7.2.1 Projectors

The imaginary lines drawn from the contour of an object to meet the plane of paper are called **projectors.**

7.2.2 Projection

The image or view obtained on the plane of paper is known as **projection.** The image is formed by joining the points obtained on the plane in proper sequence.

7.2.3 Plane of projection

The plane on which the image or view is obtained is called **the plane of projection.**

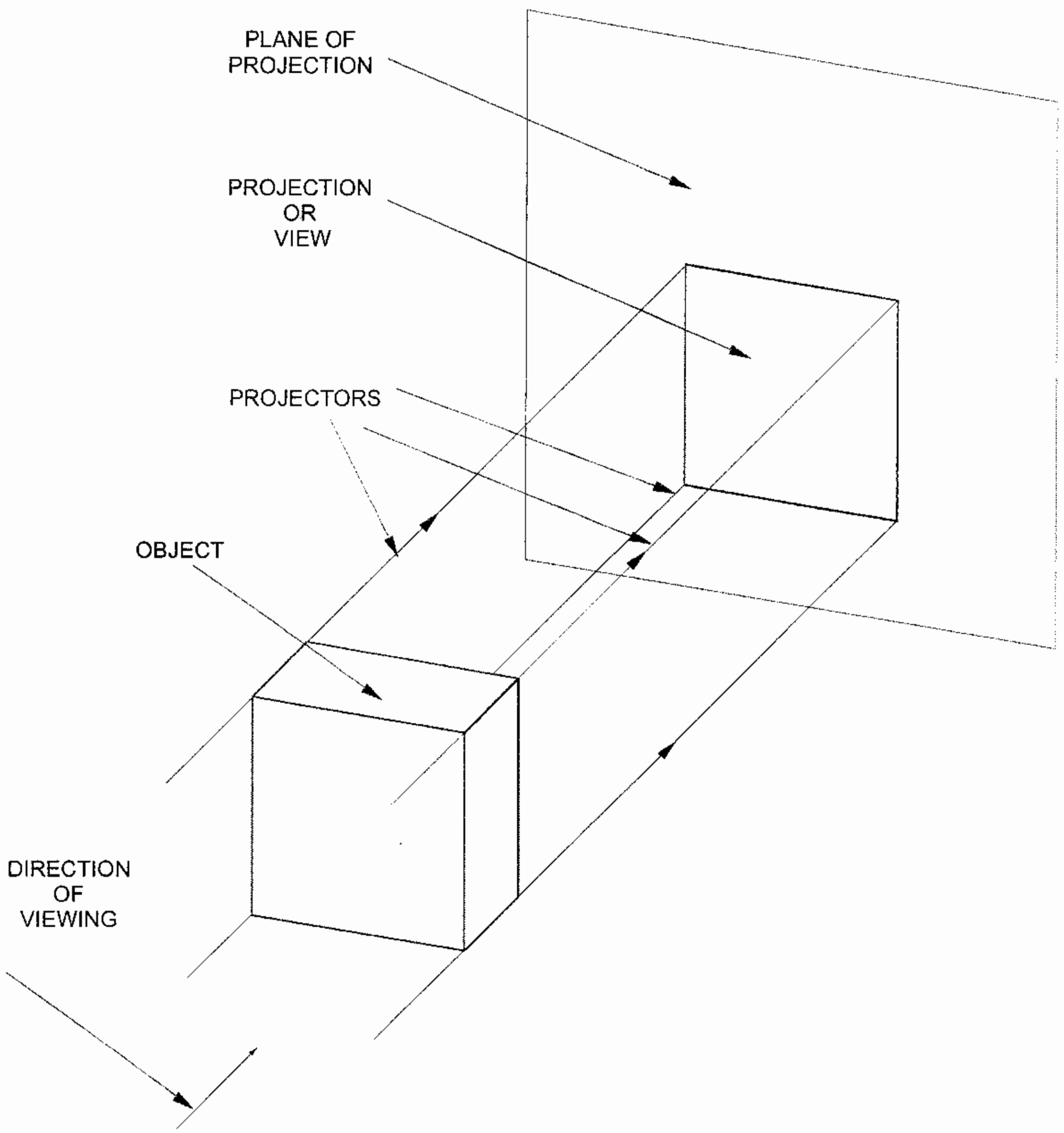

Fig 7.1 Elements of projection

7.3 Types of projection

Projection can be classified based on the following factors

i) Position of planes of projection

ii) The angle of inclination the projectors make with the plane

iii) The point of viewing

iv) The angle between the projectors

The different types of projections are :

I. Pictorial projection (single view projection)

a) Axonometric projection

i) Isometric projection

ii) Dimetric projection

iii) Trimetric projection

b) Oblique projection

i) Cavalier projection

ii) Cabinet projection

iii) Clinographic projection

c) Perspective projection

II. Orthographic projection (multi view projection)

a) First angle projection

b) Third angle projection

7.4 Pictorial projection

Pictorial projection is a projection in which the description of the object is presented completely in one view. These projections give an immediate impression of the general shape and details of the object. But the exect size of the object is not exhibited.

7.4.1 Isometric projection

It is one type of pictorial projection obtained on a plane when the object is so placed that all its three axes stand at equal angles to the plane of projection.

7.4.2 Oblique projection

It is the projection of an object on a plane when one face of the object is kept parallel to the plane and the other adjacent face is inclined at 45° to the plane, i.e. the projectors make an angle of 45° with the plane of projection. Here two axes are perpendicular to each other. But the third axis is drawn either at 30° or at 45° to the horizontal. The main types of oblique drawings are i) Cavalier drawing and ii) Cabinet drawing.

Cavalier drawing :

In this type of drawing, two axes are drawn perpendicular to each other and the third is inclined at 45°. It is made to the exact dimensions of the object. However, in many instances, this projections makes the view appear distorted.

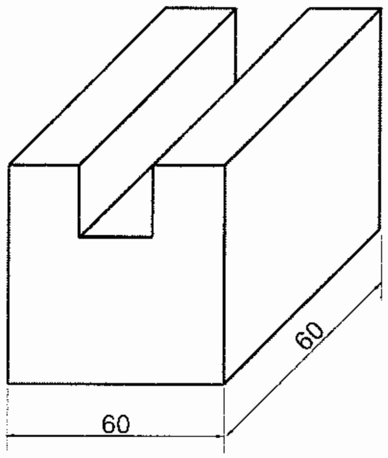

Fig 7.2 Cavalier drawing

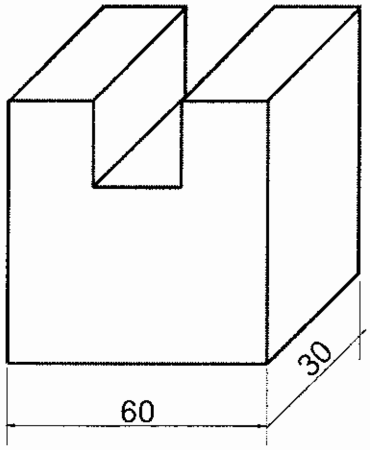

Fig 7.3 Cabinet drawing

Cabinet drawing :

To reduce distortion, the dimensions of the object along the receding axis is drawn to half scale. The resulting view is called cabinet drawing.

7.4.3 Perspective projection

It is the projection of an object obtained on a plane when the projectors converge to a point. This projection does not represent the actual size of the object.

7.5 Orthographic projection

It is the projection in which different views of an object are obtained on planes of projection when the projectors are parallel to each other and perpendicular to the plane on which the view is projected.

There are some assumptions to be made for obtaining orthographic projection :

1. The observer looks at the object from an infinite distance.

2. The lines drawn from various points on the contour of the object (projectors) are parallel to each other.

3. On projection from the object, these lines meet the plane (of projection) at right angles (the projectors are perpendicular to the plane of projection)

4. The plane of projection is transparent.

In *Fig. 7.1,* the observer looks at the object from an infinite distance. As such, the projectors are parallel to each other as shown in the figure. These projectors meet the plane of projection which is transparent at right angles to it. The points made by the projectors on the plane are joined in proper sequence and the projection (or) view is obtained.

The view so obtained is not sufficient for the complete description of the object as it shows only two dimensions. In order to provide complete description of the object, one or more views on different planes should be obtained in a similar manner changing only the position of viewing the object.

7.5.1 Principal planes of projection

Generally, two planes are used to obtain views in orthographic projection. Vertical plane (V.P) and Horizontal Plane (H.P) are known as **principal planes of projection.** They are also called as **reference planes** and are perpendicular to each other and transparent.

Vertical Plane (V.P) : The plane which is vertical is known as vertical plane. Front view of the object is obtained on the plane.

Horizontal Plane (H.P) : The plane which is horizontal and perpendicular to the vertical plane is known as horizontal plane. The top view of the object is obtained on this plane.

Profile Plane (P.P) : The plane which is perpendicular to both vertical plane and horizontal plane is known as profile plane. It is also called a **Auxiliary Vertical Plane** (A.V.P)

Auxiliary Plane: The plane which is placed at any angle to the two principal planes is known as auxiliary plane.

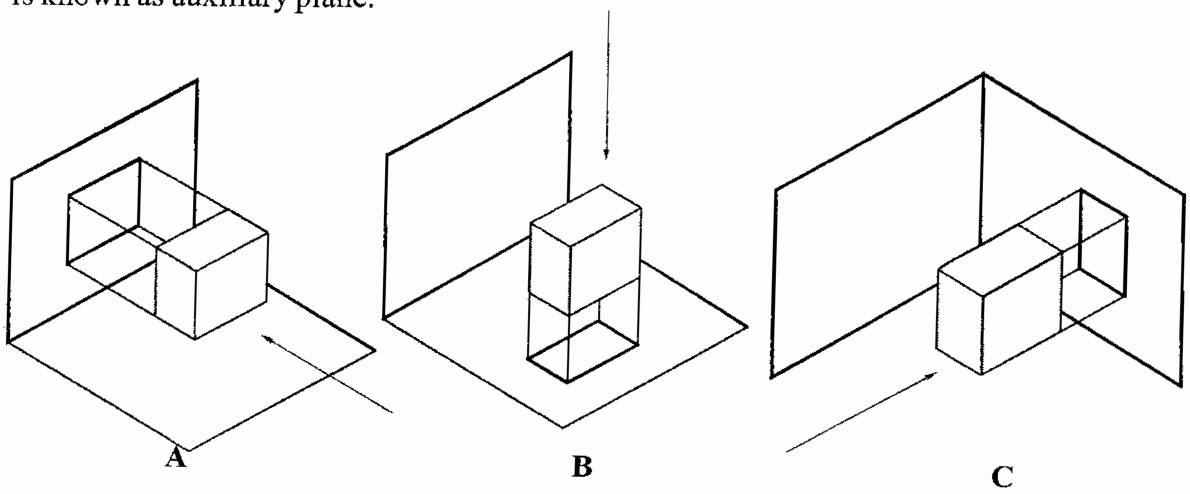

Fig 7.4 Principle planes of projection

A. Front view on verticle plane B. Top view on horizontal plane C. Side view on Profile Plane

7.5.2 Views obtained in orthographic projection

Different views are obtained on different planes in orthographic projection. They are

1. Front view (or) Elevation
2. Top view (or) Plan
3. Side view (or) Side elevation
4. Auxiliary view

Front View : When the object is viewed from its front, the projection (or) view of the object obtained on the vertical plane, is known as front view. It is also known as **Elevation.** The details of length and height are found in this view.

Top View : When the object is viewed from its top, the projection (or) view of the object obtained on the horizontal plane is known as top view. It is also called as **Plan.** Length and width details of the object are found in this view.

Side View : When the object is viewed from its side, the projection (or) view of the object obtained on the auxiliary vertical plane is known as side view. It can also be called as **side elevation.**

Auxiliary View : When the object is viewed from a direction which is not parallel to any of the three major axes, the projection (or) view obtained on a auxiliary plane is known as auxiliary view. When a specific detail which cannot be shown in any of the above three views is necessary to be shown, it is done so on an auxiliary view.

Apart from the above four views, other views like view from the rear, view from below and sectional views can also be drawn for an object according to the need.

7.6 Types of orthographic projection

The object can be placed in any of the four quadrants to obtain the projections (or) views. In convention, the practice of getting the views by placing the object either in the first or in the third quadrant is followed. So, the types of orthographic projections are

1. First angle projection
2. Third angle projection

7.6.1 First Angle Projection

When the object is placed in the first quadrant in front of the vertical plane and above the horizontal plane, the method of obtaining the projections on these planes is called **First Angle Projection.**

In this method of projection, the object lies between the observer and the planes of projection. The front view is obtained above the ground line (or) reference line and the top view is obtained below the ground line. When the horizontal plane and auxiliary vertical plane are rotated after obtaining the projections, the views will be arranged as follows:

1. The top view is placed below the front view
2. The left side view is placed at the right side of the front view
3. The right side view is positional at the left side of the front view

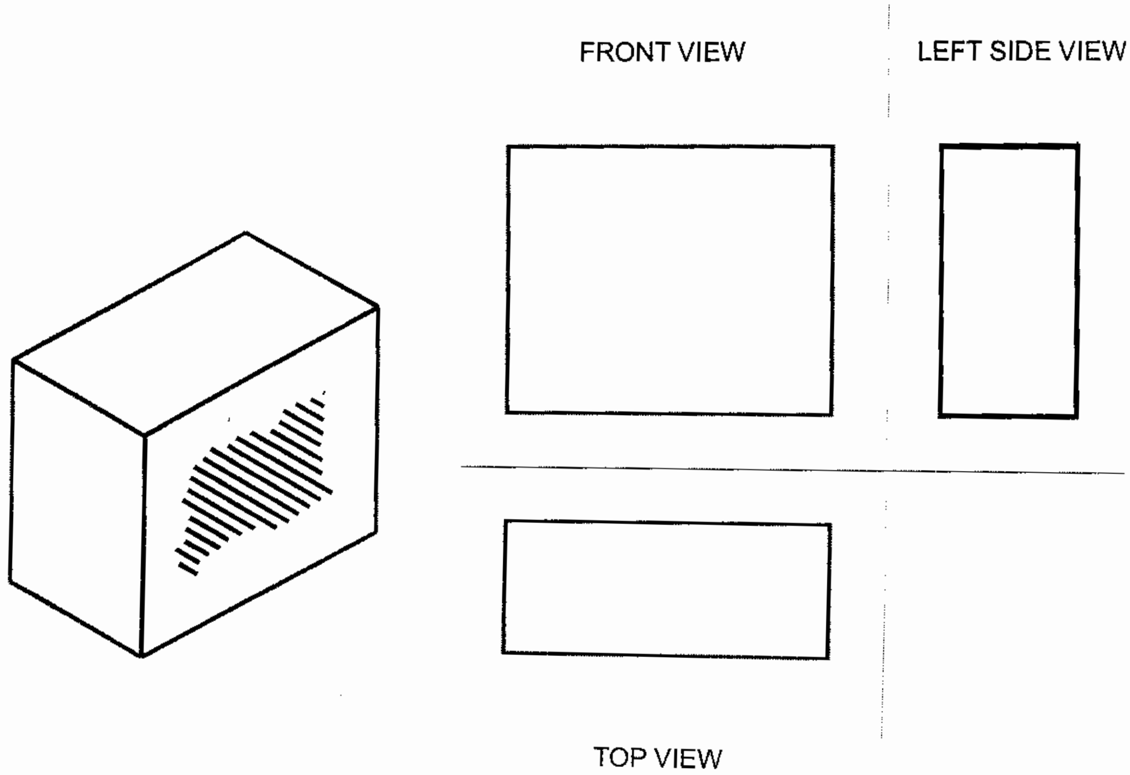

Fig. 7.5. Arrangements of views in first angle projection

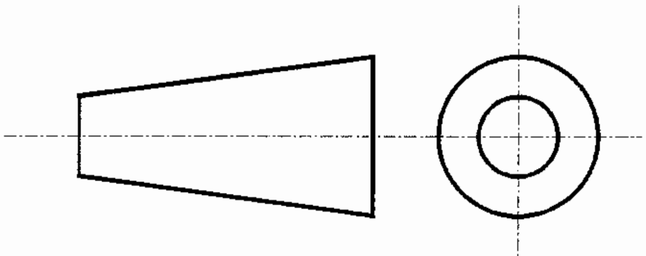

Fig. 7.6 Symbol of first angle projection

7.6.2 Third Angle Projection

The method of obtaining projections on vertical and horizontal planes by placing the object in the third quadrant is known as **Third angle projection.** Here, the object is placed behind the vertical plane and below the horizontal plane.

In the method of projection, the planes of projection lie between the observer and the object. The front view is obtained below the ground line and the top view is obtained above the ground line.

When the horizontal plane and the auxiliary vertical plane are rotated after obtaining the projections, the views will be arranged as follows:

1. The top view is placed above the front view
2. The left side view is placed at the left side of the front view
3. The right side view is placed at the right side of the front view

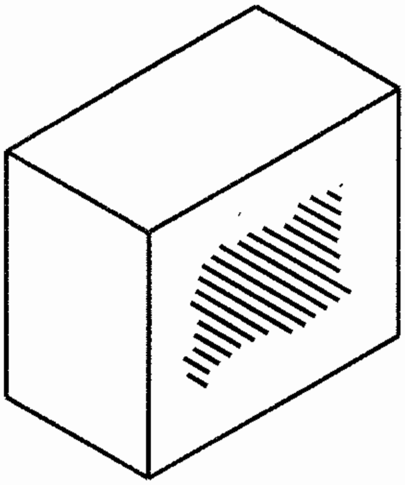

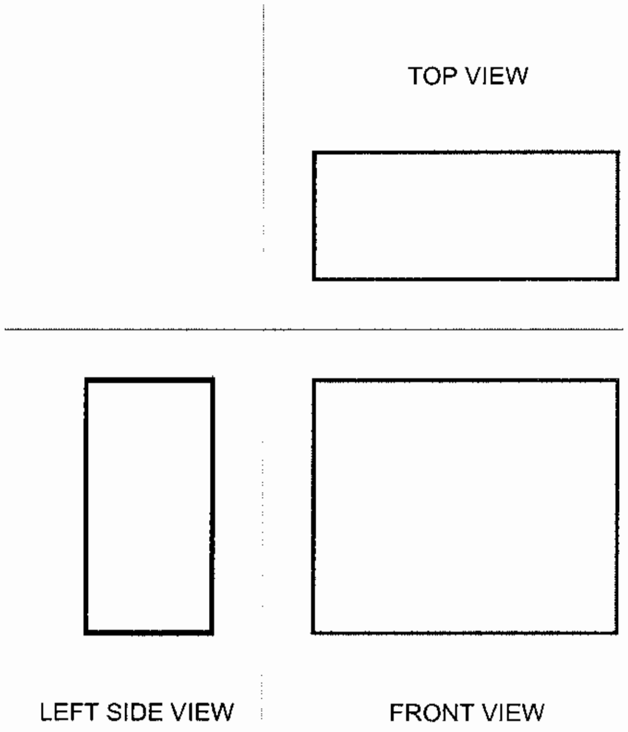

Fig.7.7 Arrangements of views in third angle projection

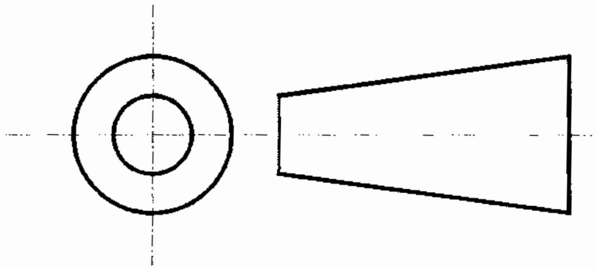

Fig. 7.8 Symbol of third angle projection

Though both first angle and third angle projections are in practice world over, B.I.S., has recommended the use of first angle projections for engineering drawing in line with the specification of ISO.

7.7 Making orthographic projection from isometric view

The isometric view helps us in understanding the shape of the object but does not give the dimensional and inner details of the object. But these details are necessary for designing and manufacturing purposes. So, the need of orthographic projection becomes essential.

The object is viewed from the direction of arrow to obtain the front view. If the arrow is not given, the most prominent view is taken as front view. The other views are obtained by viewing the object in direction that are perpendicular to the one utilised for front view.

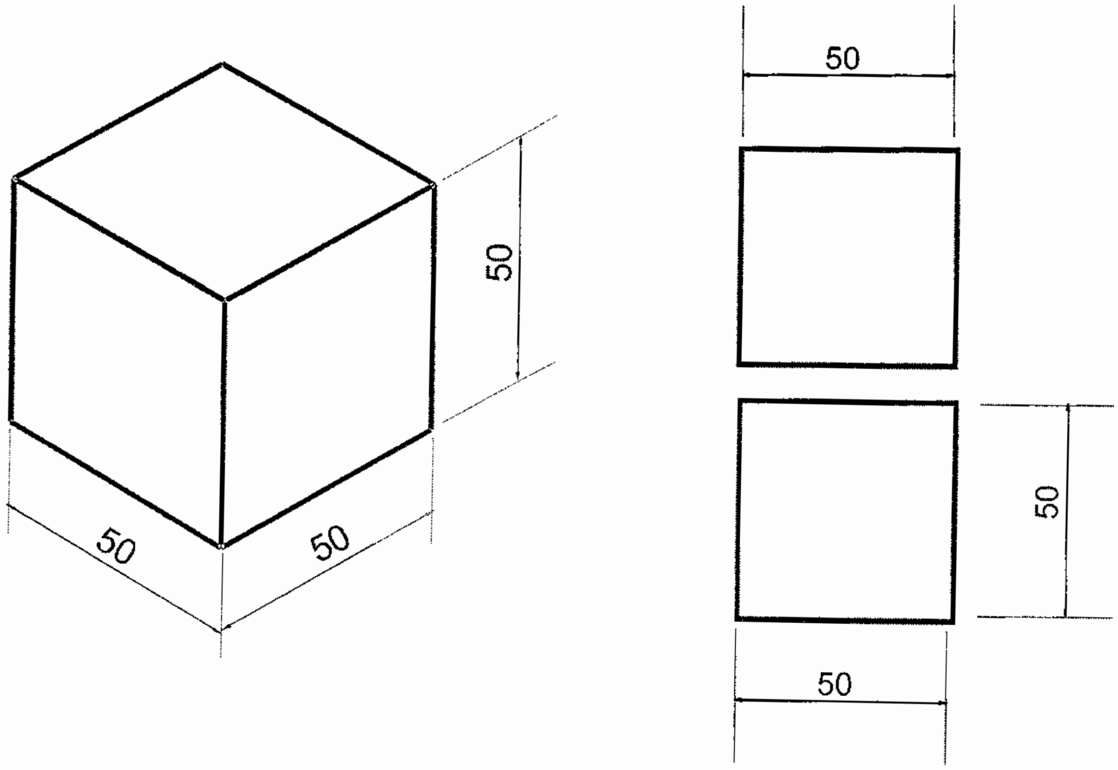

Fig. 7.9 Making orthographic projection

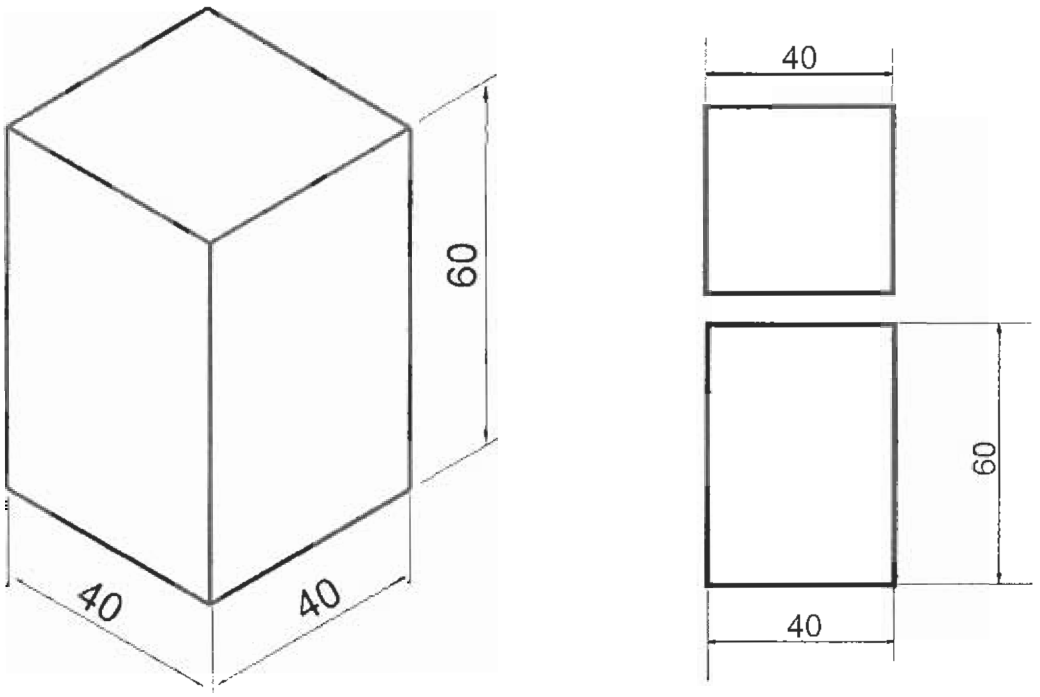

Fig. 7.10 Making orthographic projection

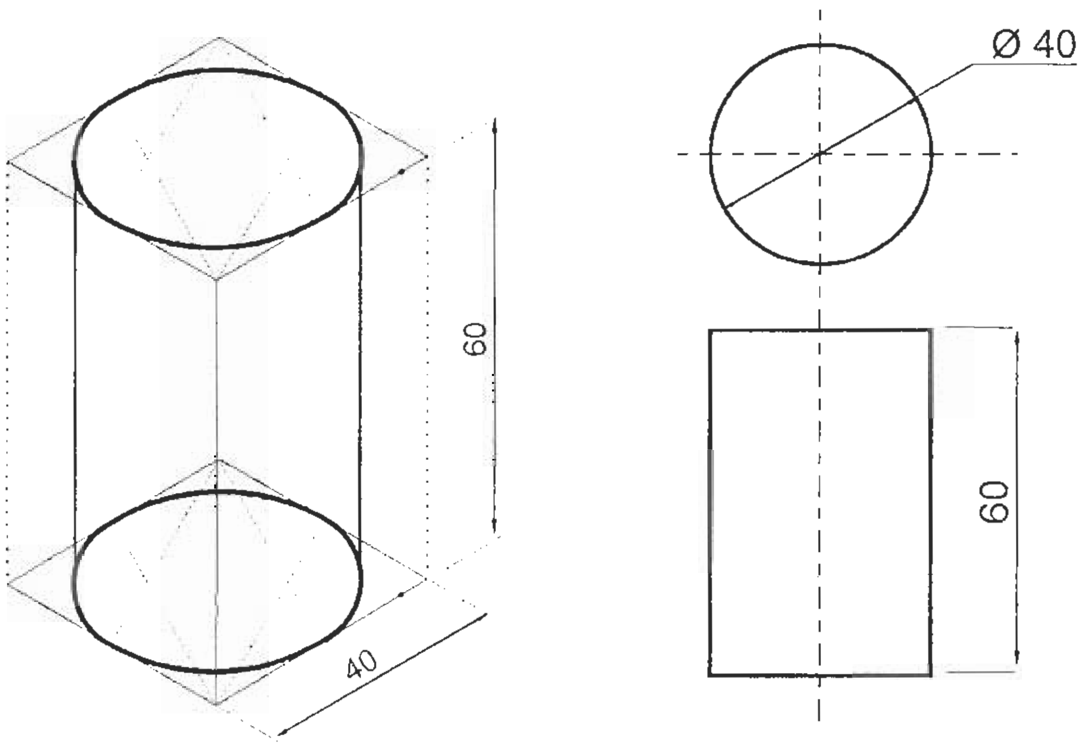

Fig. 7.11 Making orthographic projection

The following illustrations are given to make orthographic projections from the given isometric views

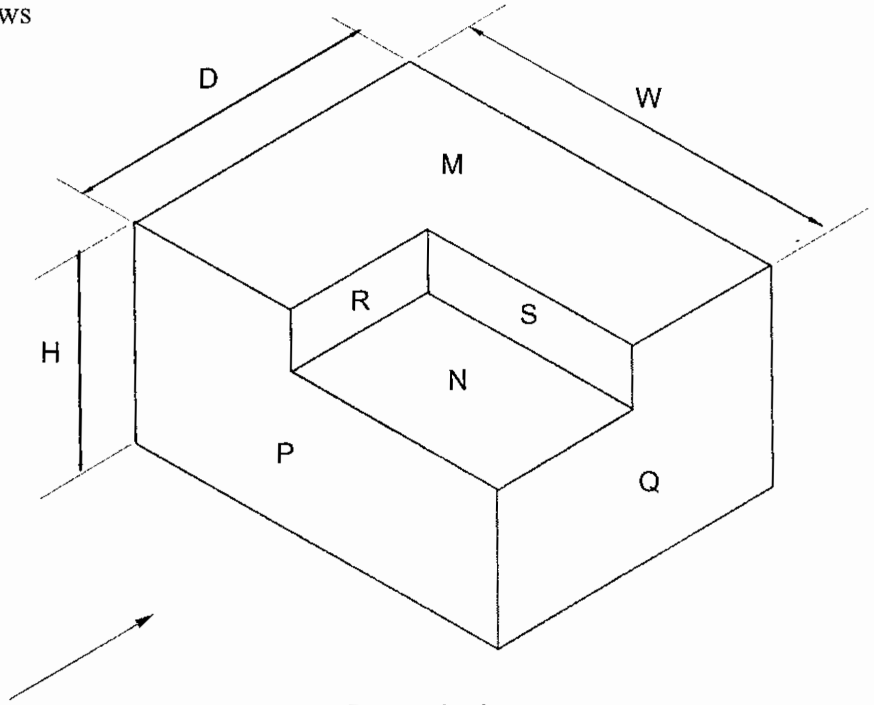

Isometric view

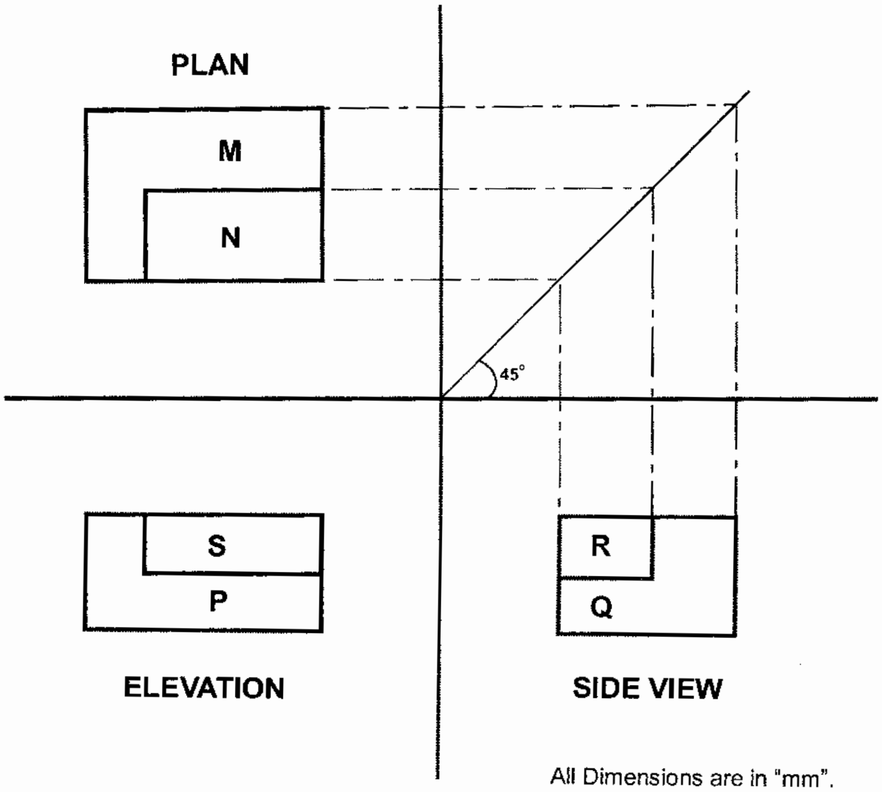

Fig. 7.12 Orthographic projection

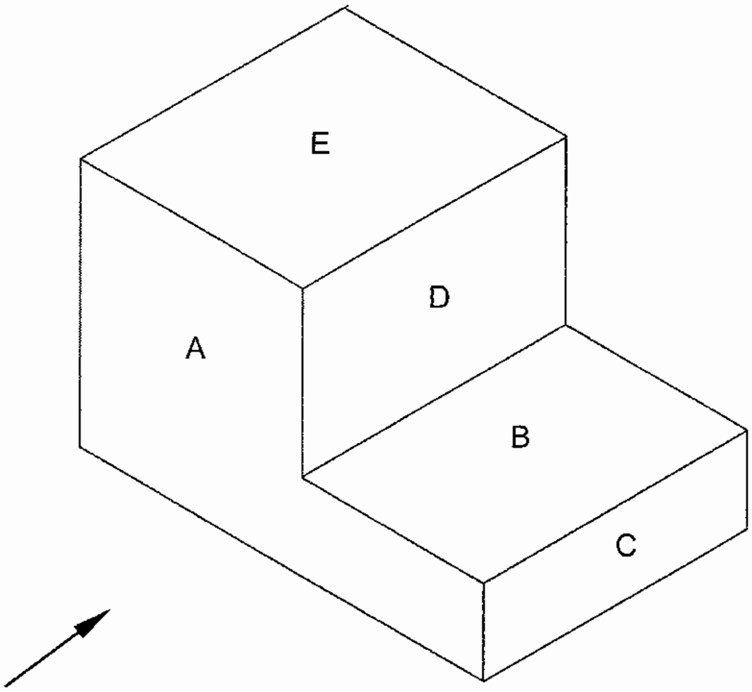

Isometric view

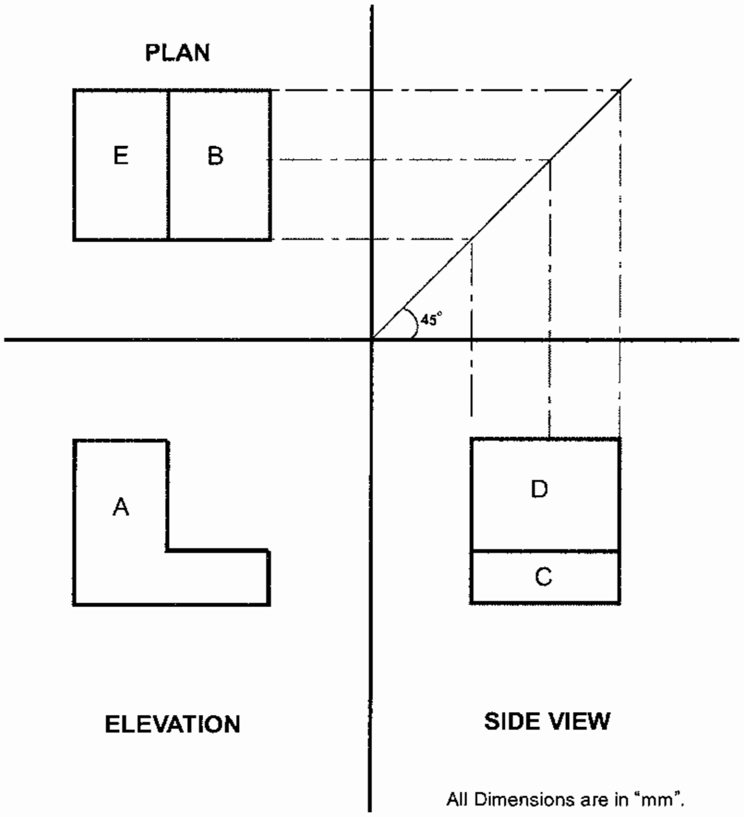

Fig. 7.13 Orthographic projection

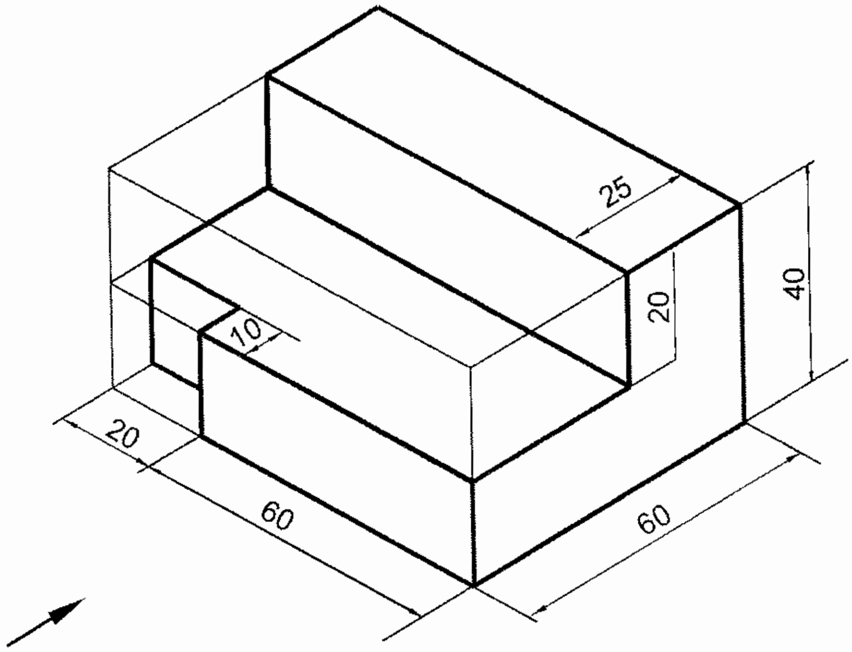

Isometric view

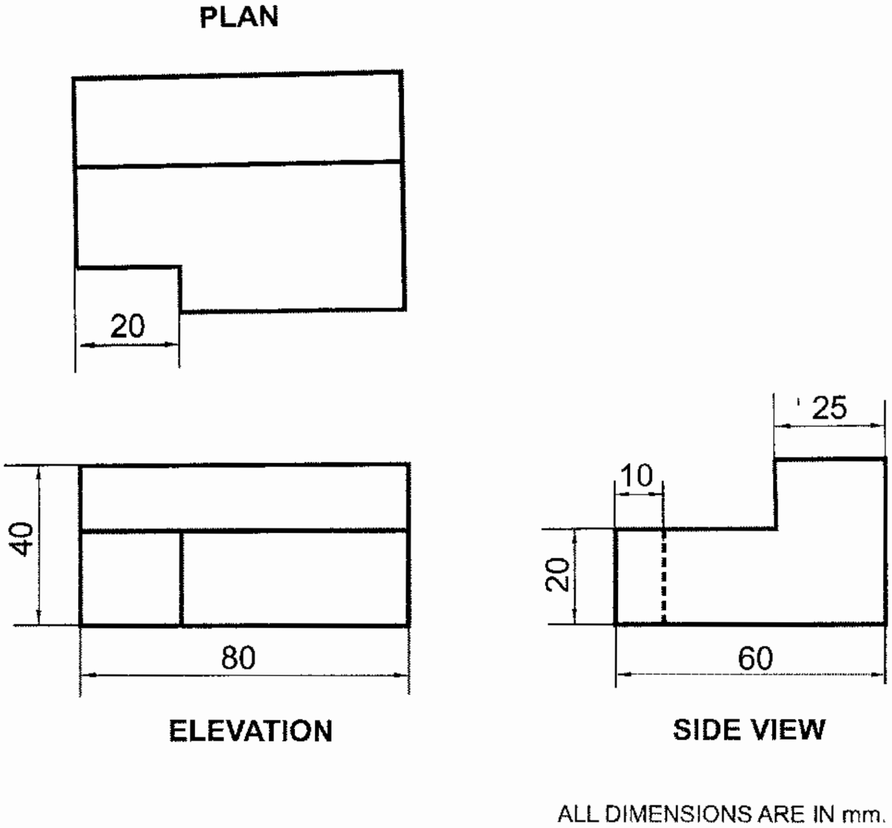

Fig. 7.14 Orthographic projection

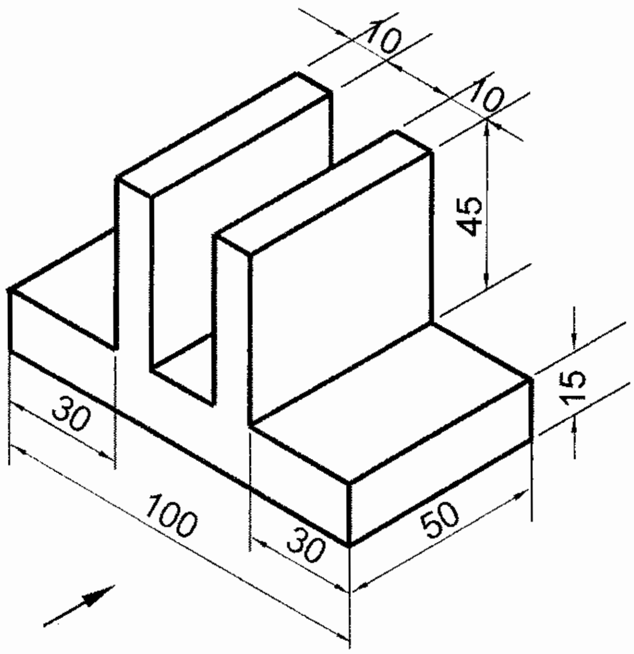

Isometric view

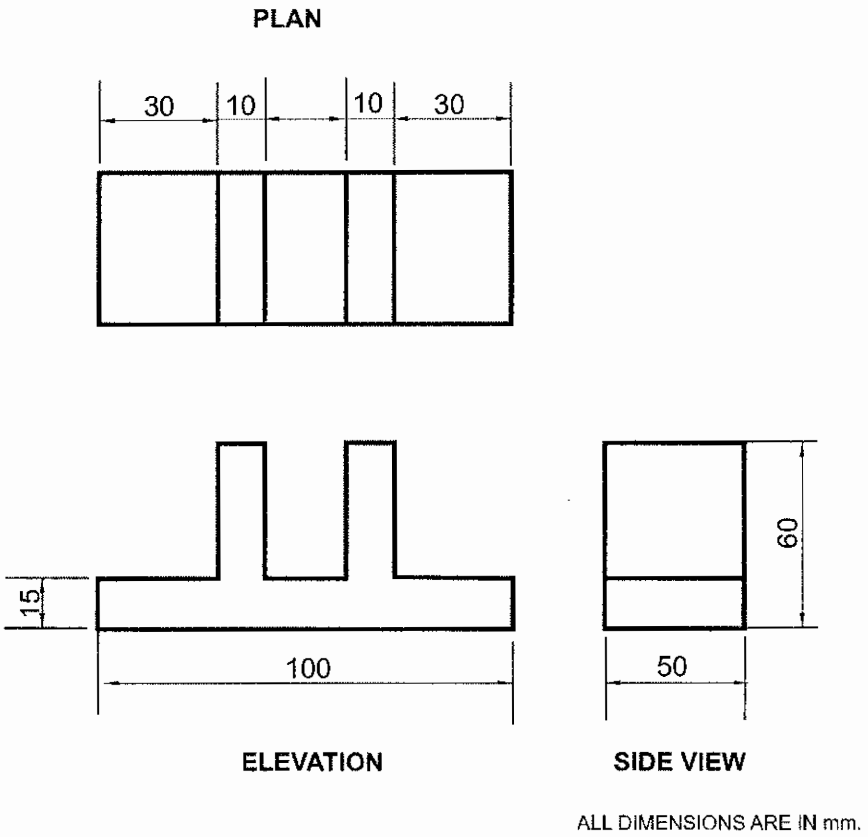

Fig. 7.15 Orthographic projection

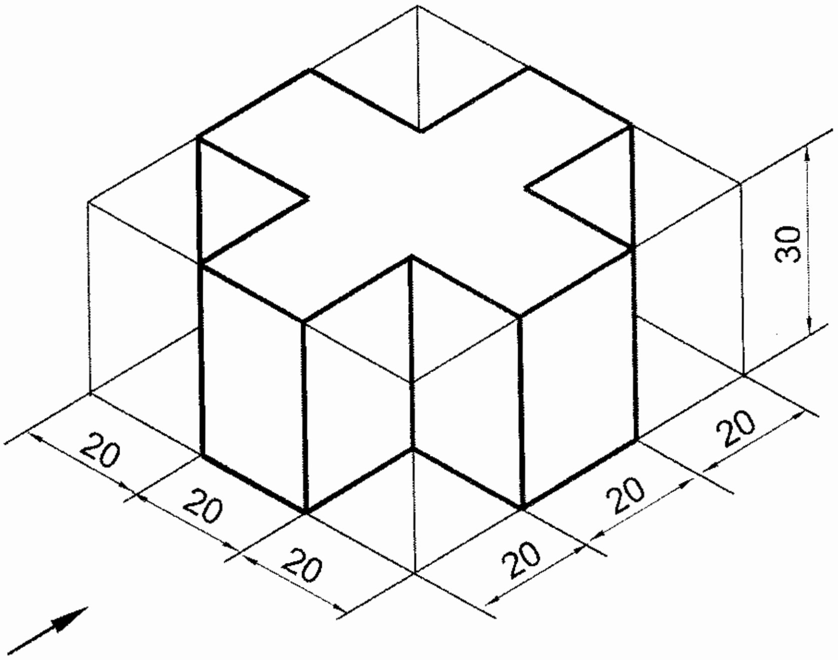

Isometric view

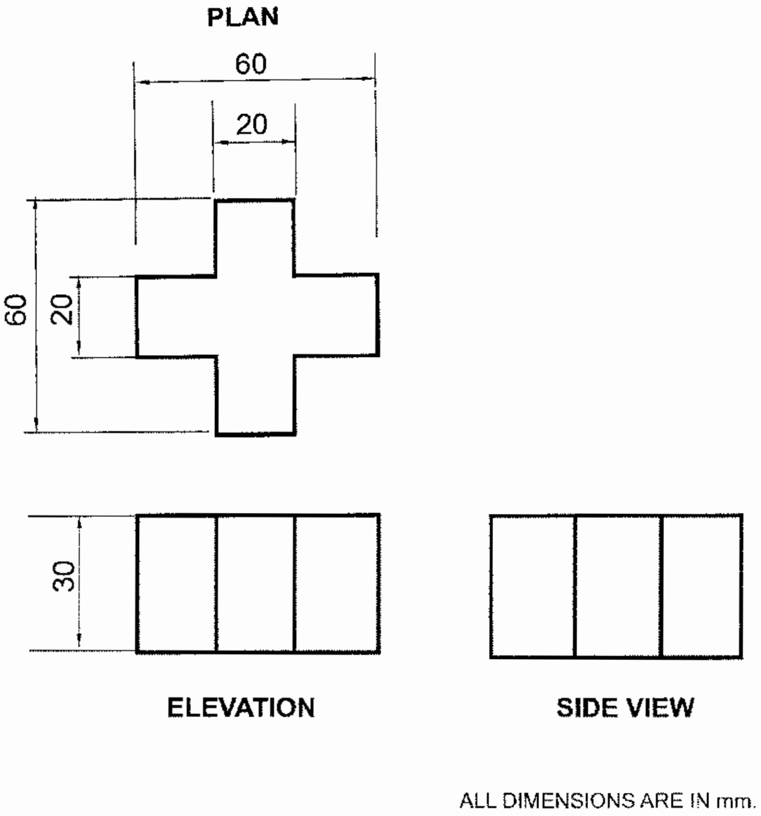

Fig. 7.16 Orthographic projection

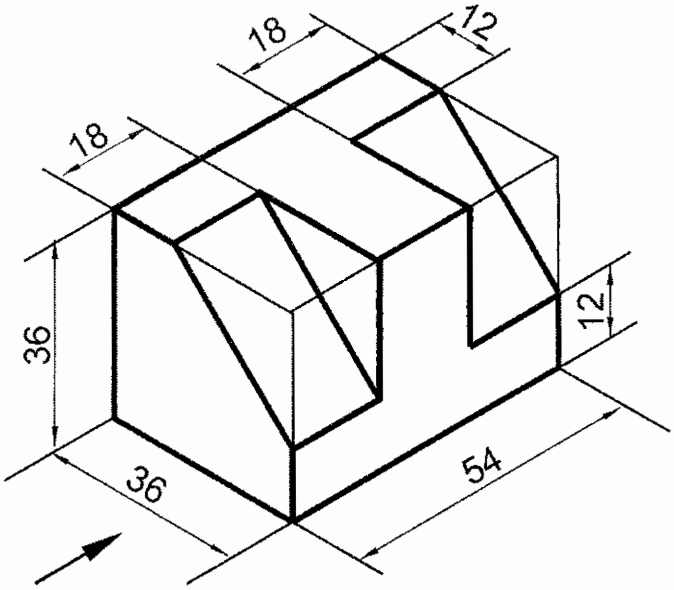

Isometric view

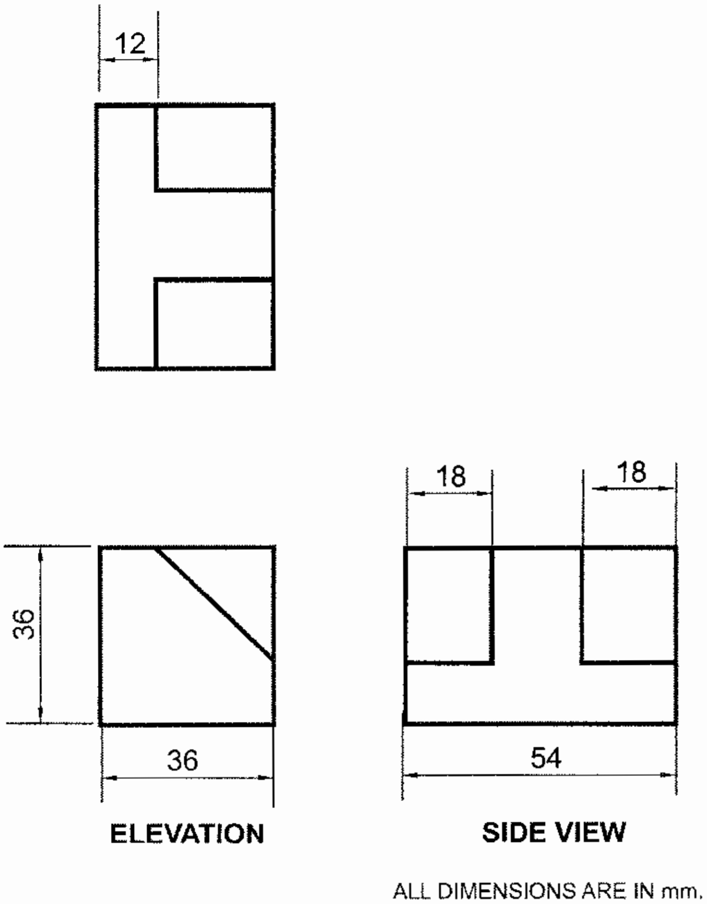

Fig. 7.17 Orthographic projection

The following drawings are given to make practice in obtaining orthographic projection in first angle projection from each of them. The direction of arrow is considered as the direction of viewing.

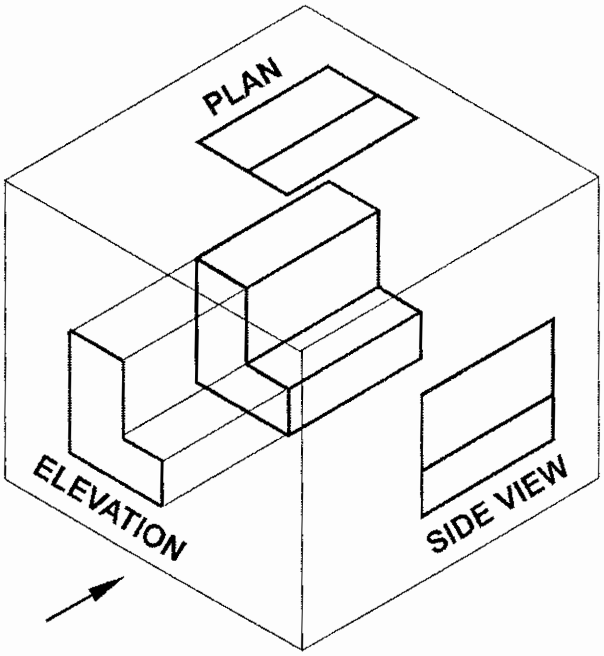

Fig. 7.18

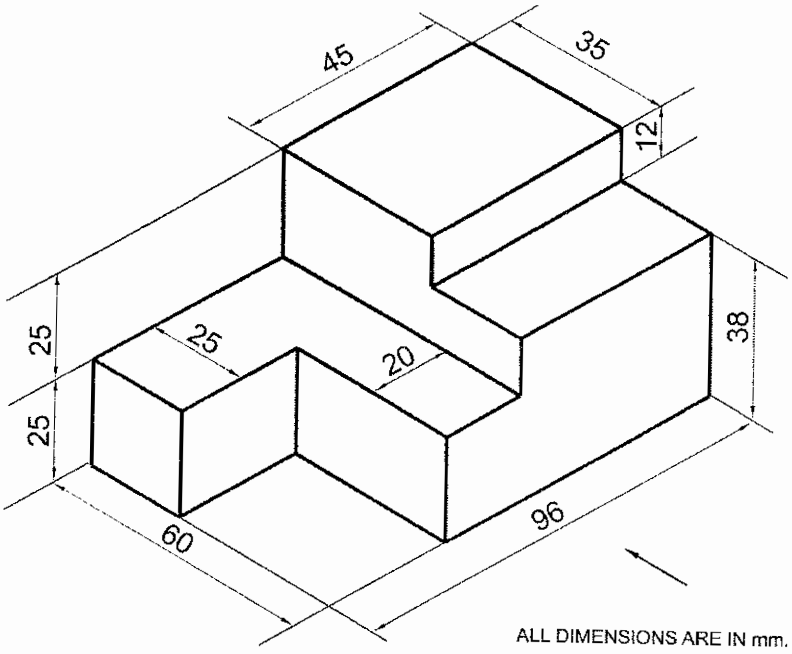

Fig. 7.19

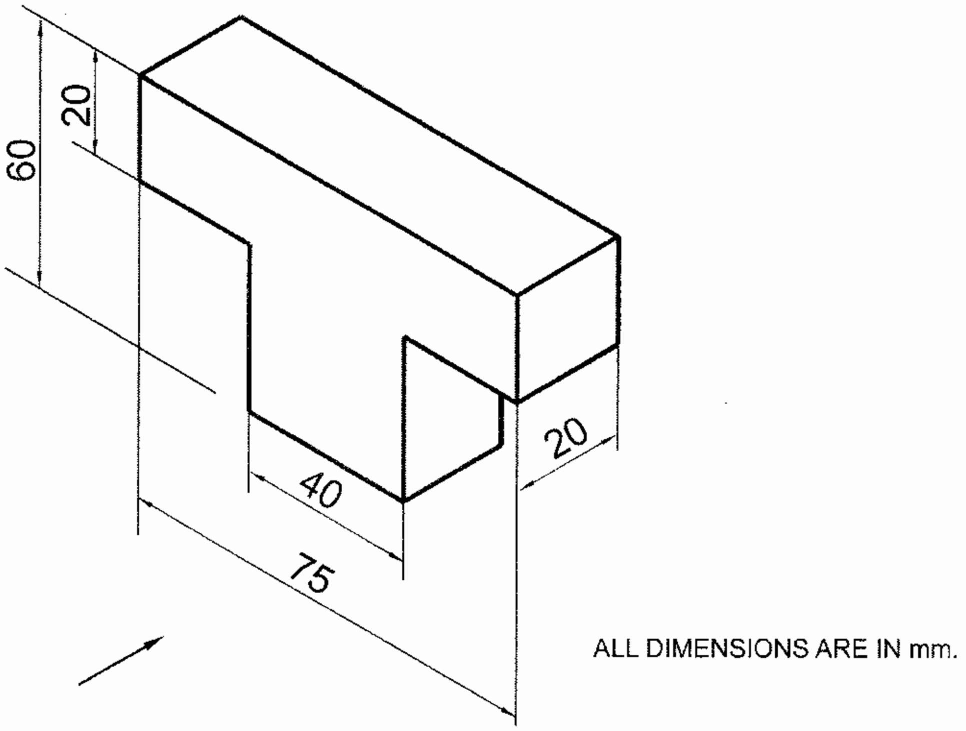

Fig. 7.20

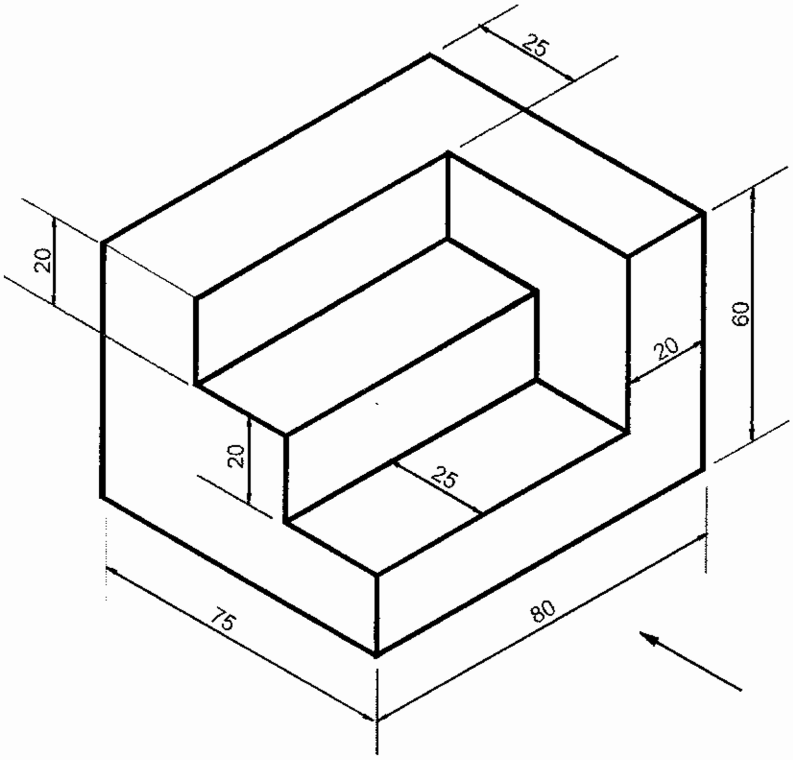

Fig. 7.21

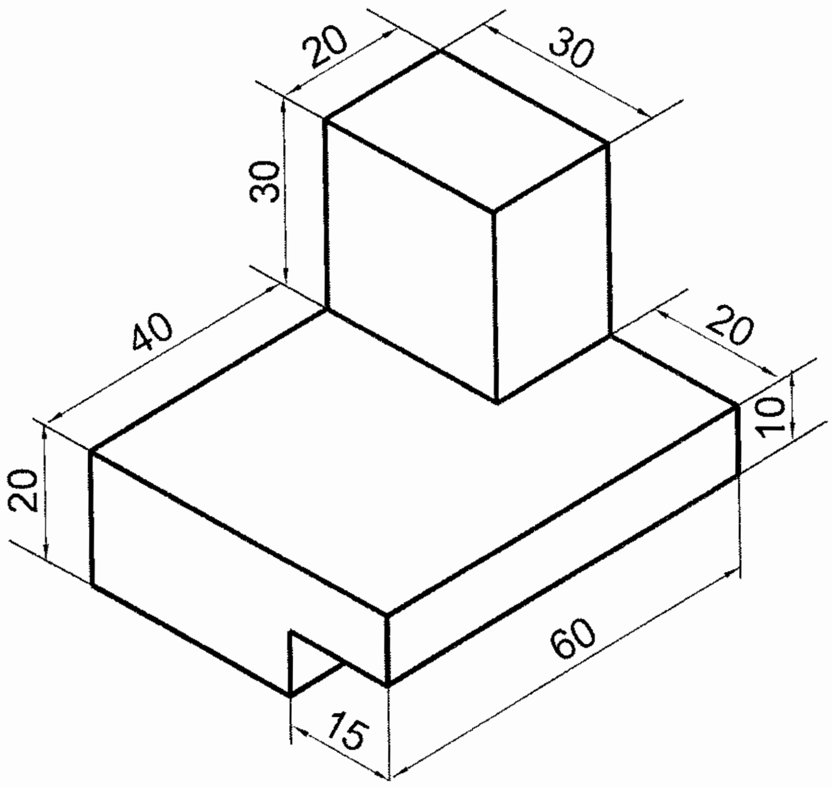

Fig. 7.22

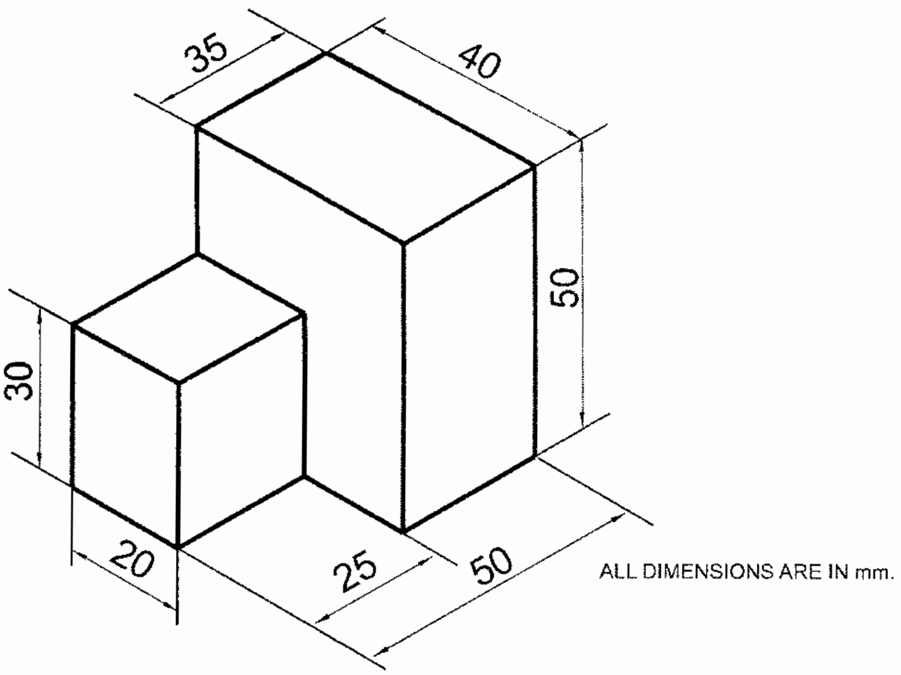

Fig. 7.23

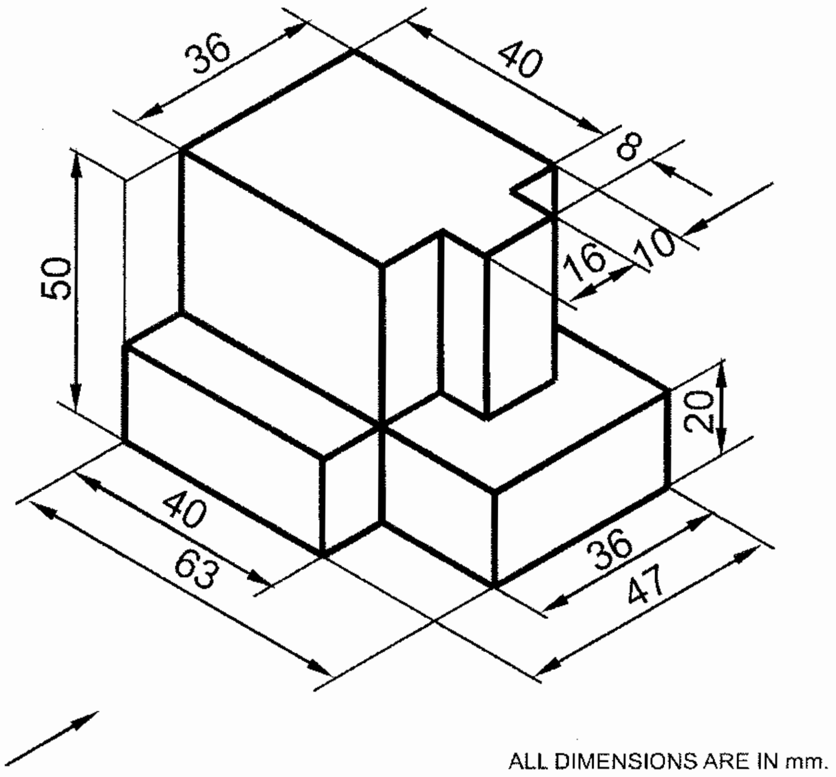

Fig. 7.24

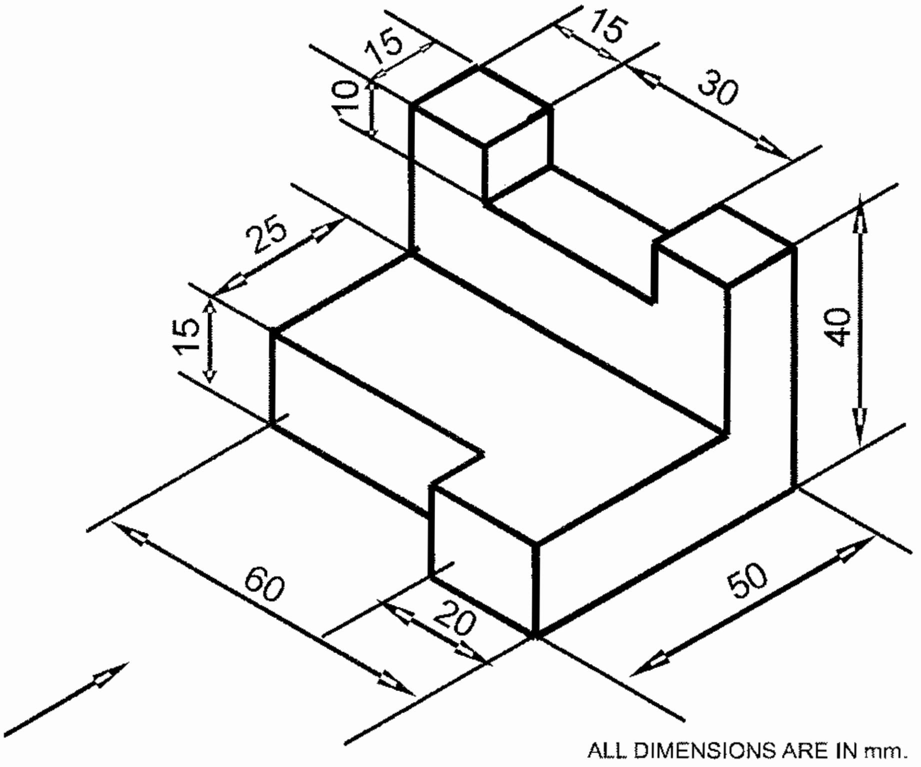

Fig. 7.25

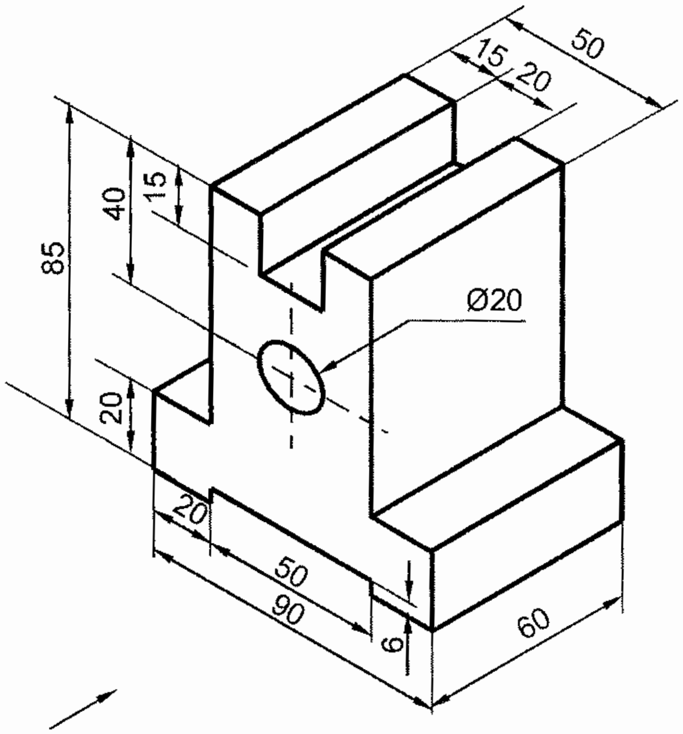

ALL DIMENSIONS ARE IN mm.

Fig. 7.26

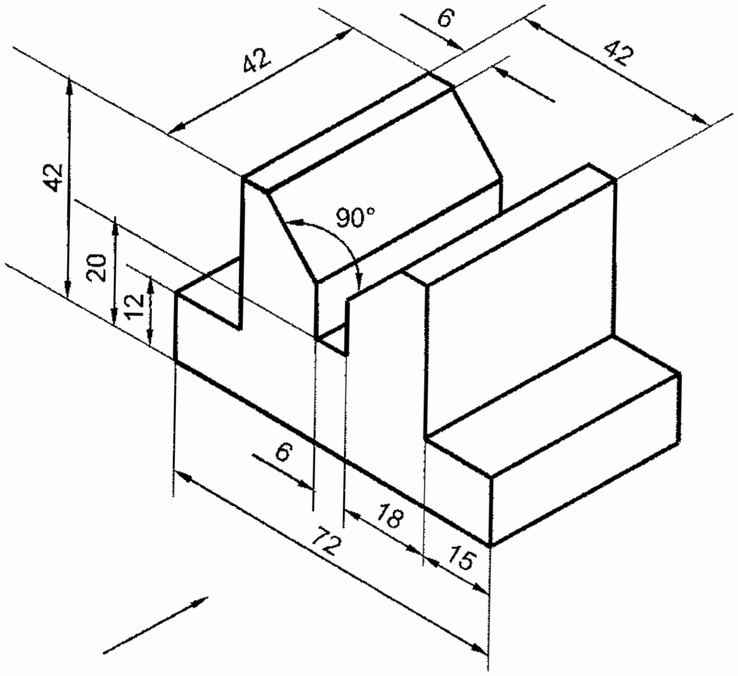

ALL DIMENSIONS ARE IN mm.

Fig. 7.27

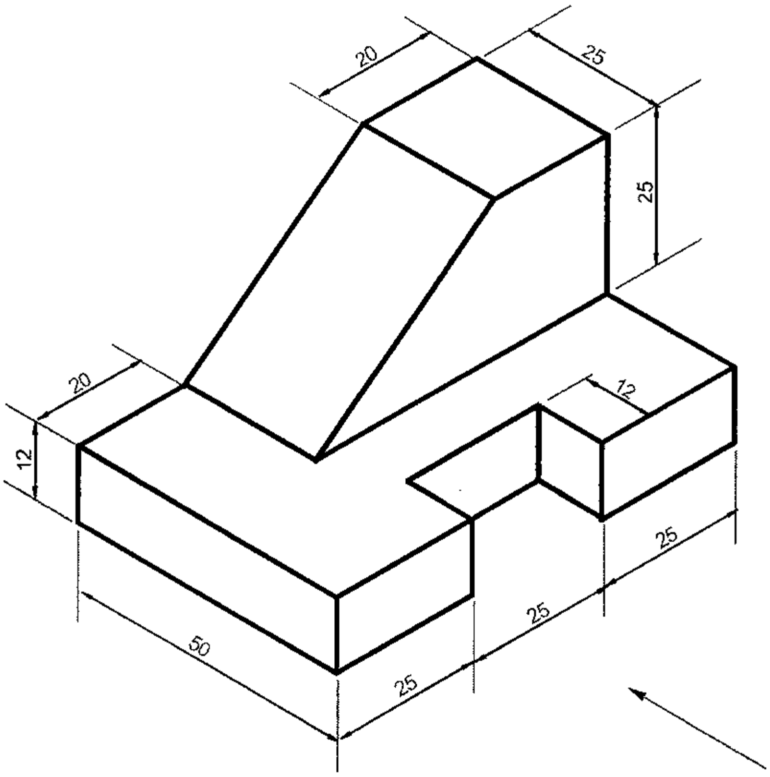

Fig. 7.28

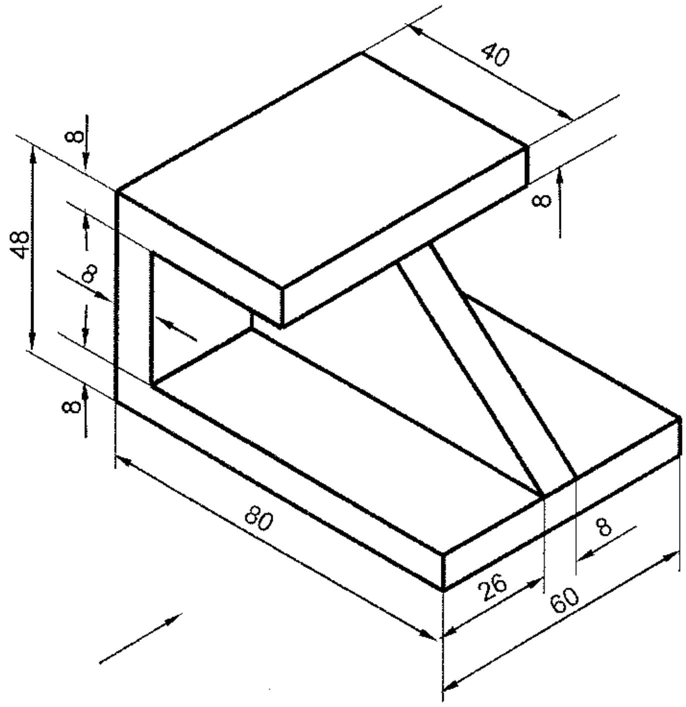

Fig. 7.29

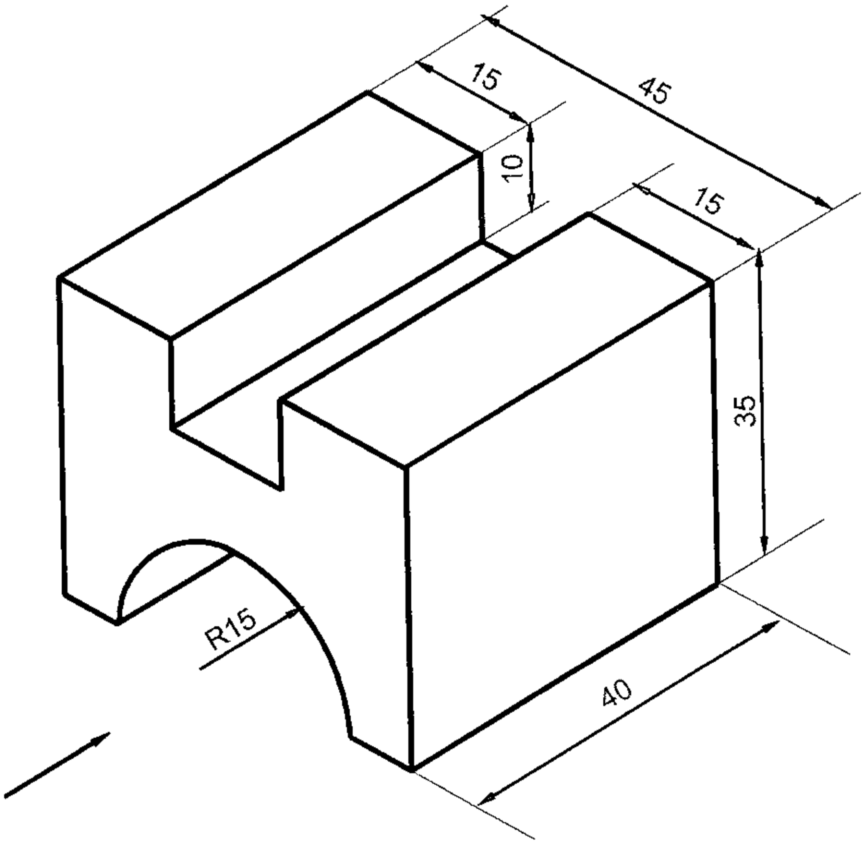

Fig. 7.30

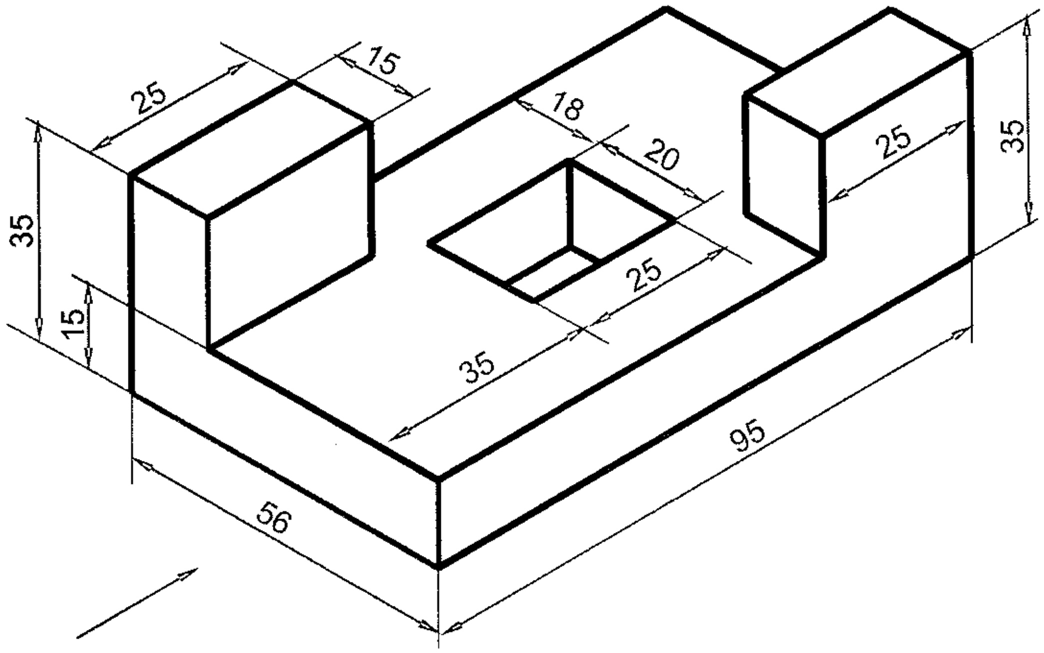

Fig. 7.31

7.8 Making isometric view from orthographic projection

Isometric projection is the representation of an object in pictorial form. In isometric projection, there are three principal axes namely X, Y and Z which are 120^0 apart. The length, breadth and height of the object are drawn on these axes.

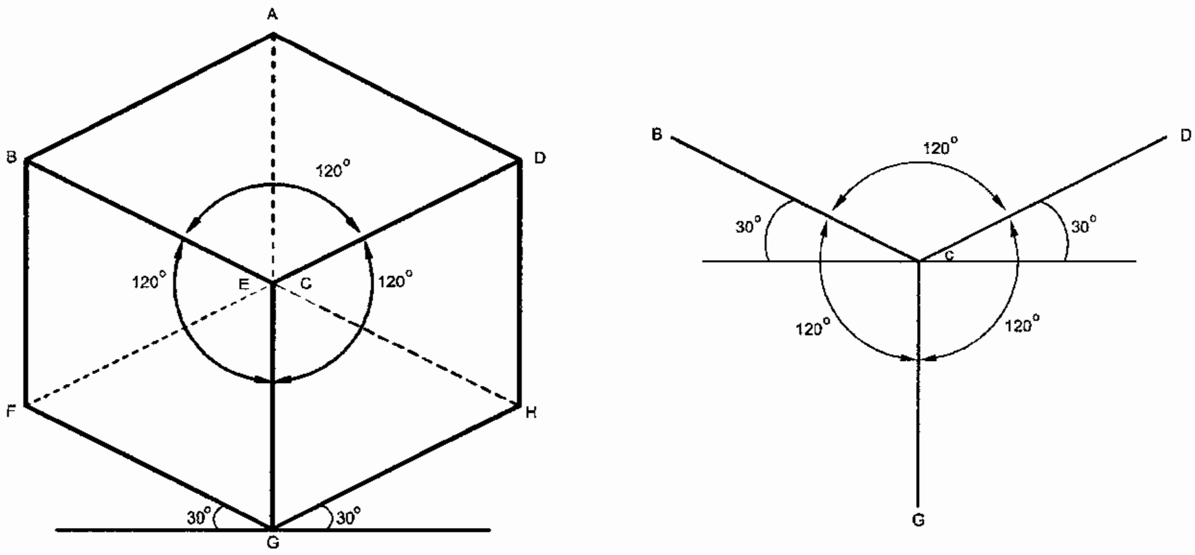

Fig. 7.32 Three axes of isometric view

The following exercises are given as practice to draw isometric views from orthographic projections.

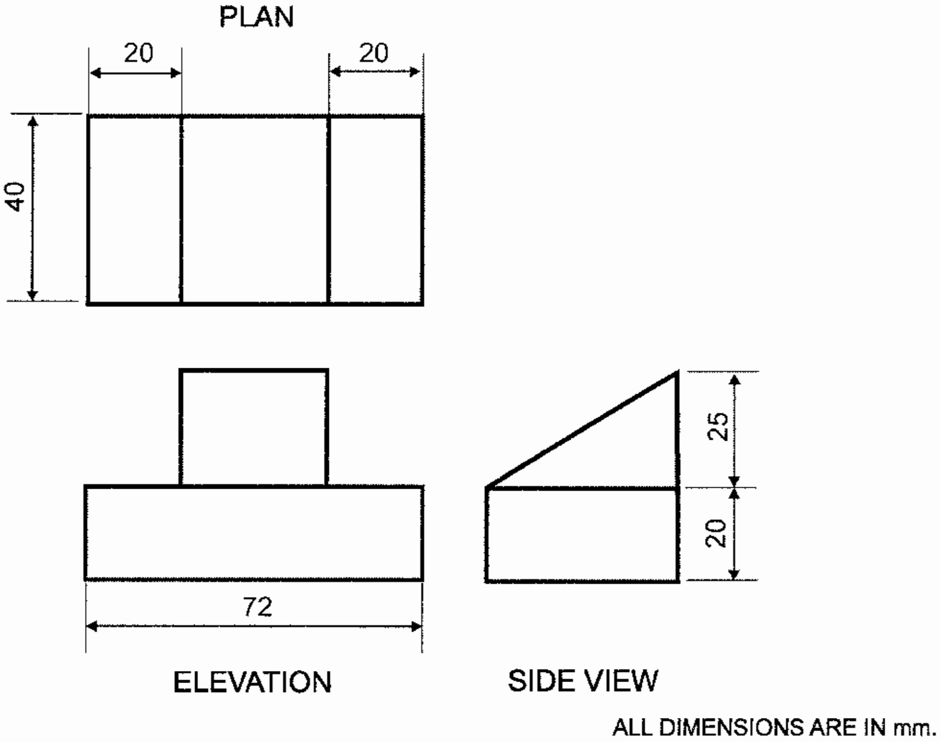

Fig. 7.33

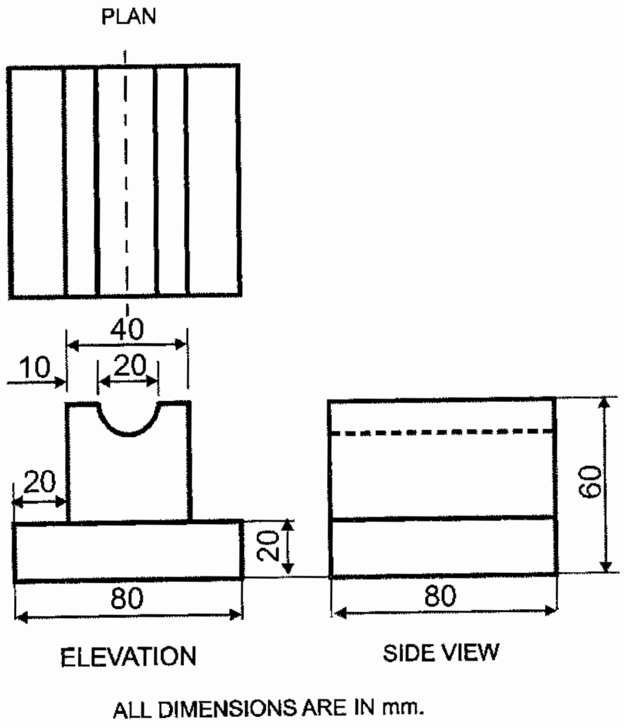

Fig. 7.34

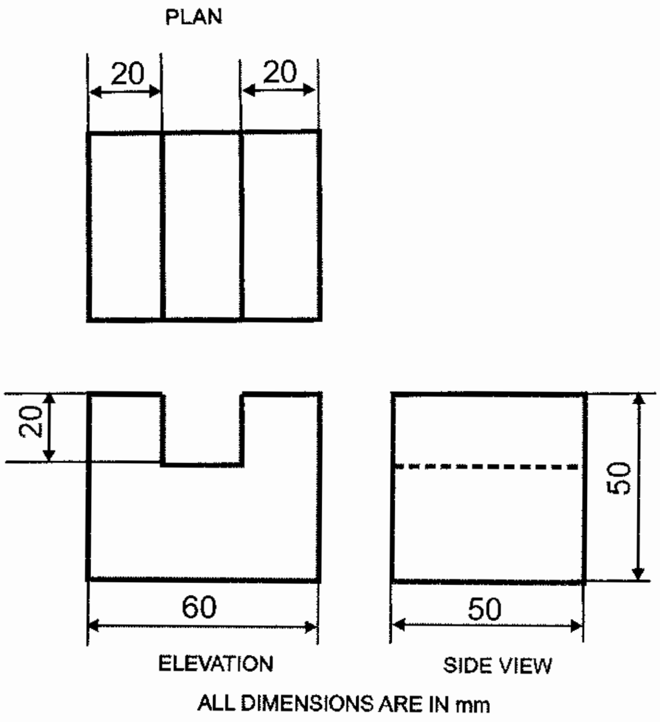

Fig. 7.35

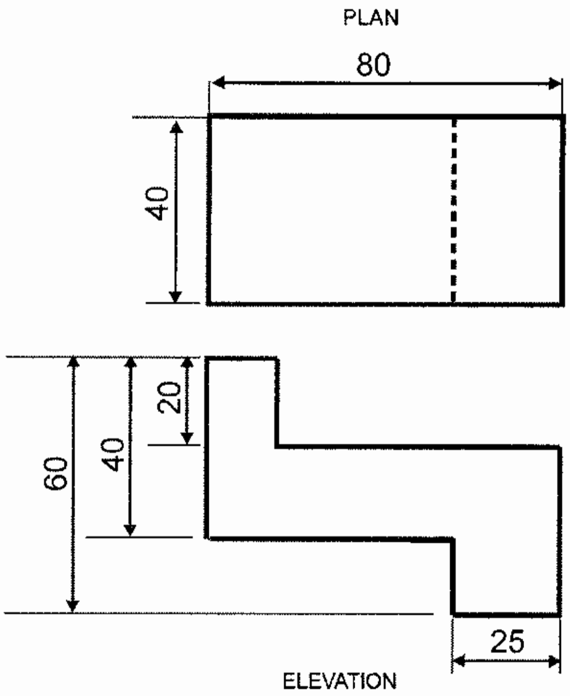

ALL DIMENSIONS ARE IN mm

Fig. 7.36

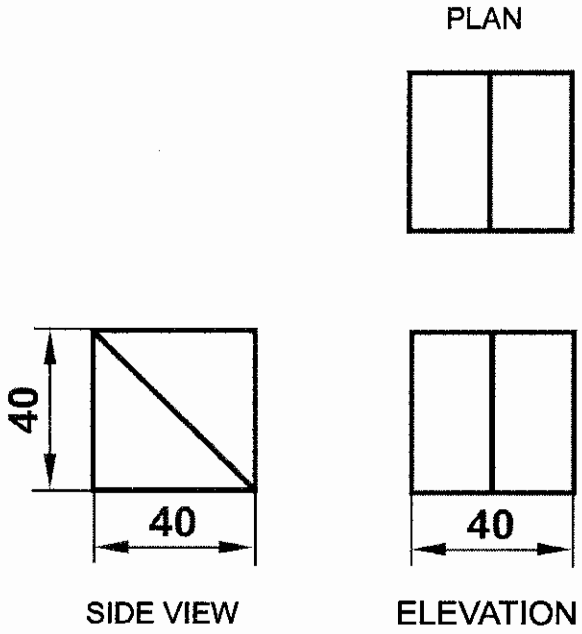

ALL DIMENSIONS ARE IN mm.

Fig. 7.37

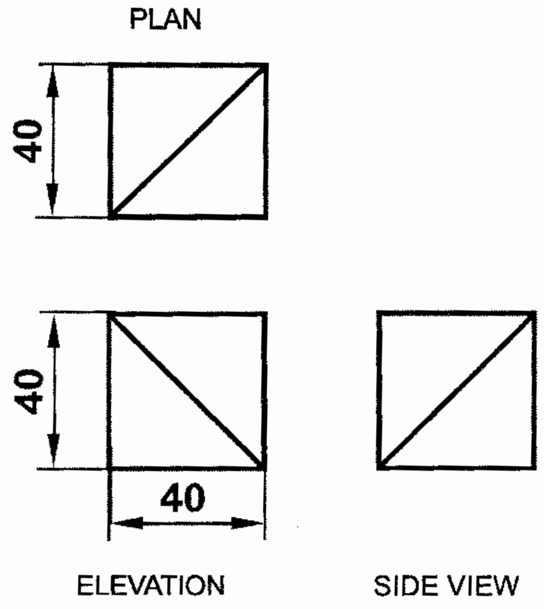

ALL DIMENSIONS ARE IN mm.

Fig. 7.38

QUESTIONS

I. Choose the correct option

1. The method of drawing length, breadth and height of an object on planes 120° apart is known as

   a. orthographic projection   b.isometric projection

   c. first angle projection   d. third angle projection

2. The lines drawn from the contour of an object to the plane of projection are called

   a. imaginary lines   b. straight lines   c. projectors   d. projection

3. Top view is obtained on

   a. vertical plane   b.horizontal plane   c. profile plane

   d. auxiliary plane

4. In first angle projection, the top view is placed

   a. above the front view   b. left side of the front view

   c. right side of the front view   d. below the front view

I. B. Answer the following questions in one or two words

1. What are the types projections ?
2. What are the types of orthographic projection ?

II. Answer the following questions in one or two lines

1. What is isometric projection ?
2. What is orthographic projection ?
3. What is third angle projection ?
4. What are the views obtained in orthographic projection ?
5. Draw the symbol of first angle projection.
6. Draw the symbol of third angle projection.

III. Answer the following questions in about a page

1.Explain the views obtained in orthographic projection.

IV. Answer the following questions in detail

1. Draw the front view, top view and the side view of the given isometric view in first angle projection.

2.Draw the isometric view of the object whose views are given in orthographic projection.

(Use the exercises given in earlier pages for these questions)

8. SECTIONAL VIEWS

8.1 Introduction

In orthographic projection, the interior details of an object are represented by dotted lines. When such details are limited, there are only a few dotted lines in the drawing. Too many dotted lines drawn in a drawing to represent a complicated interior of an object make it difficult and confusing for the reader. To overcome this difficulty, these objects are imagined to be cut through completely or partially by a plane known as cutting plane. The portion of the object lying between this imaginary cutting plane and the observer is assumed to be removed to show the inner details of the object clearly. The view obtained from the cut object is drawn as a **sectional view** or simply **a section.**

The objectives of a sectional view

1. To show the inner details of the object
2. To dimension the hidden features correctly
3. To provide additional informations about the object

8.2 Elements of a sectional view

In understanding the sectional views, the following elements are essential

1. Cutting plane
2. Direction of viewing
3. Sectional view
4. Sectional lines

8.2.1 Cutting plane

An imaginary plane by which the object is assumed to be cut is called **cutting plane.** It is assumed to be thin and transparent. A cutting plane is perpendicular to any one of the reference planes (Vertical Plane or Horizontal Plane). At the same time, it is either parallel or inclined or perpendicular to the other reference plane.

A cutting plane is represented by a long chain line thick at ends. This cutting plane line is shown in a view adjacent to the sectional view. This line may be straight or it may change direction at some points to show every internal detail in a same sectional view.

8.2.2 Direction of viewing

The direction of viewing the sectioned object is represented by showing arrows at the ends of the cutting plane line. The direction indicated by the arrows helps in identifying the portion of the object imagined to be removed after section.

8.2.3 Sectional view

The view obtained by cutting the object by a cutting plane to show the inner details is known as **sectional view.** The sectional view shows all visible edges behind the cutting plane.

If the cutting plane is parallel to horizontal plane, the sectional view is shown in the top view. This view is known as **sectional top view.** The cutting plane in indicated in the front view.

When the cutting plane is parallel to the vertical plane, the sectional view is shown in the Front view and the view is known as **sectional front view.** The cutting plane is shown in the top view.

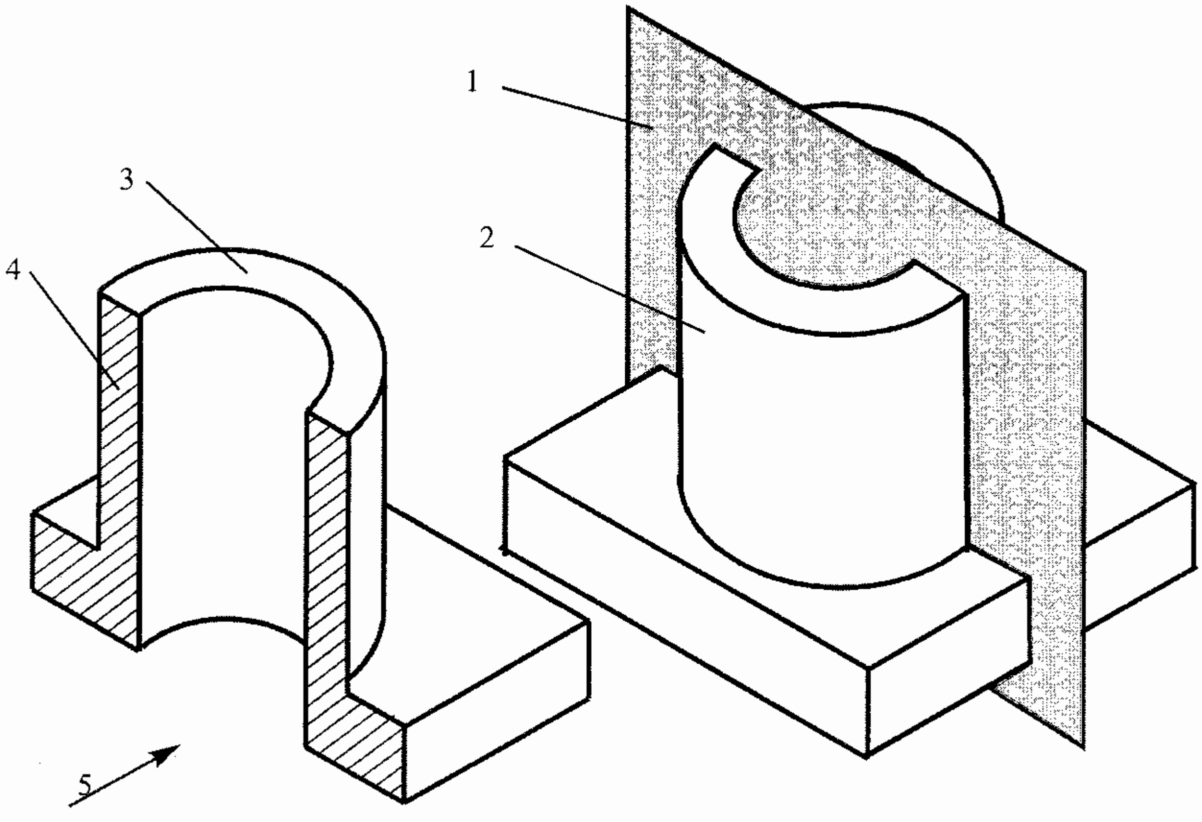

Fig 8.1 Elements of a sectional view

1. Cutting plane 2. Portion of the part to be removed 3. Sectioned part 4. Sectional lines 5. Direction of viewing

8.2.4 Sectional lines

The lines used to show the surfaces sectioned by the cutting plane are known as **section lines.** They are thin, equispaced and parallel. They are drawn inclined at 45° to the horizontal line or the axis of the object. They differentiate the sectioned portion of the object from the un - sectioned portion. The process of drawing sectional lines on sectional views is called **hatching.**

8.3 Guidelines to draw hatching lines in sectional views

The following guidelines are to be followed in the process of hatching.

1) Sectional lines should be drawn at 45° to the axis of the object or main outline of the section. They should not be drawn parallel to any of the main outlines.

2) The space between the sectional lines should be equal and approximately equal to 1.5 to 3 mm. The spacing however depends upon the overall size of the section being hatched. Uniformity in spacing is judged by the eye and attained by practice.

3) Adjacent parts in section are hatched in opposite direction or by varying the space between the sectional lines. When another part adjacent to the first two parts needs sectioning, the lines should drawn at 30° or at 60° to the horizontal line.

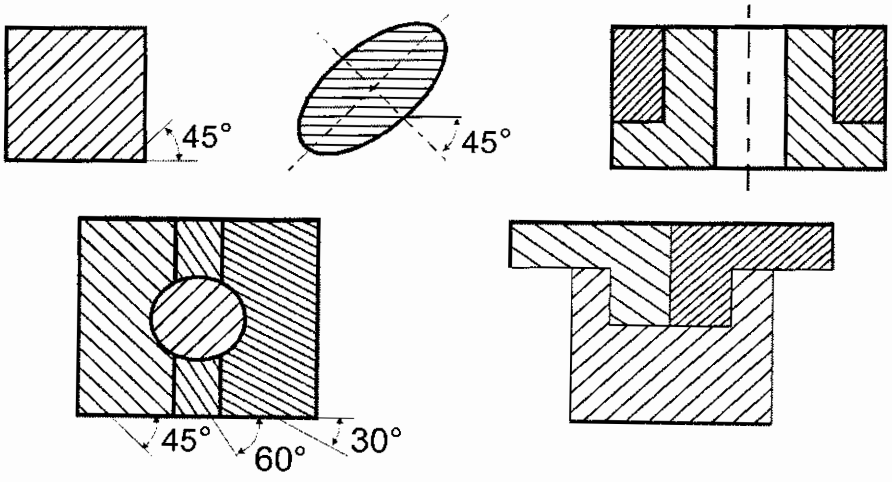

Fig 8.2 Different methods of placing sectional lines

4) When larger areas are to be sectioned, the hatching is limited to a small portion. This will avoid confusion and clumsy look of the drawing.

5) If a dimension is to be shown in a sectioned area, the dimension is made first. The section lines are then drawn leaving the area in which the dimension is made.

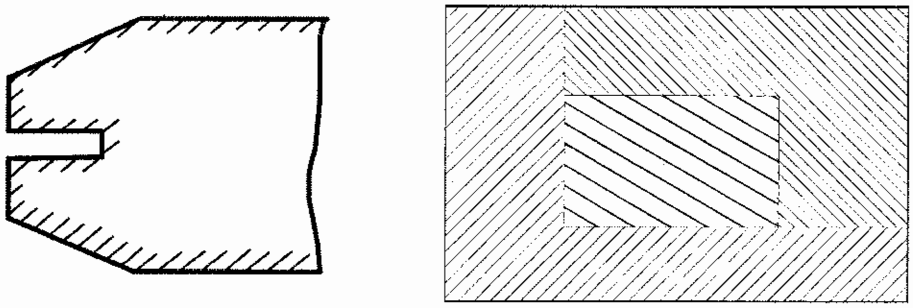

Fig 8.3 Sectioning methods

A - Sectioning a large area B - Adjacent parts in section

8.4 Types of sectional views

In order to show the inner details of the object, several, methods of sectioning are in practice in engineering drawing. The choice of the method depends upon the shape characteristics of the object to be sectioned. Some of the methods of sectioning are listed as the types of sectional views. They are

1) Full section
2) Half section
3) Off set section
4) Revolved section
5) Removed section
6) Partial section
7) Thin section

8.4.1 Full section

When an object is assumed to be cut completely through its centre line, the front half portion of the object is imaged to be removed. The remaining portion of the object is viewed and the view obtained is known as full **sectional view.**

In *Fig 8.4,* the cutting plane is allowed to pass completely throught the centre line of the object. The half portion lying between the cutting plane and the observer is imagined to be removed. The observer views the object in the direction indicated by the arrows and the view is obtained. This method is known as full section and the resultant view is called full sectional view.

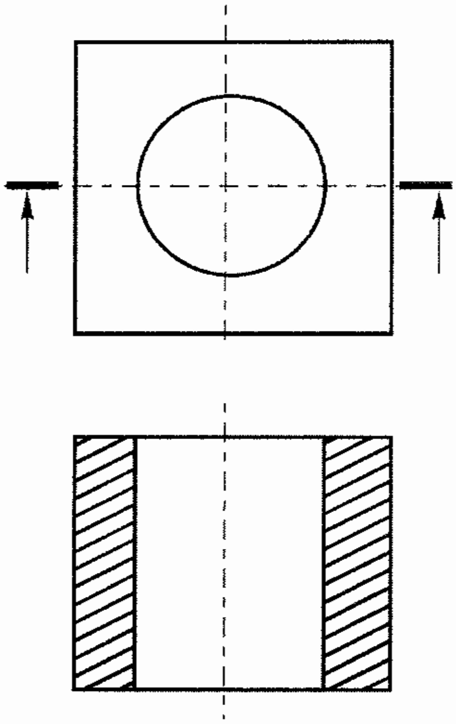

Fig 8.4 Full section

8.4.2. Half section

When the front quarter portion of the object is assumed to be removed after allowing two cutting planes at right angles, the resultant view obtained is known as **half sectional view.**

Half sectional view may be left or right when obtained in front view projected on a vertical plane. It may be top half or bottom half when obtained in a top view projected on a horizontal plane.

Half sectional view is generally obtained for symmetrical objects. The main feature of half section is that it shows both internal and external construction of the object in the same view. This feature is very useful in assembly drawings.

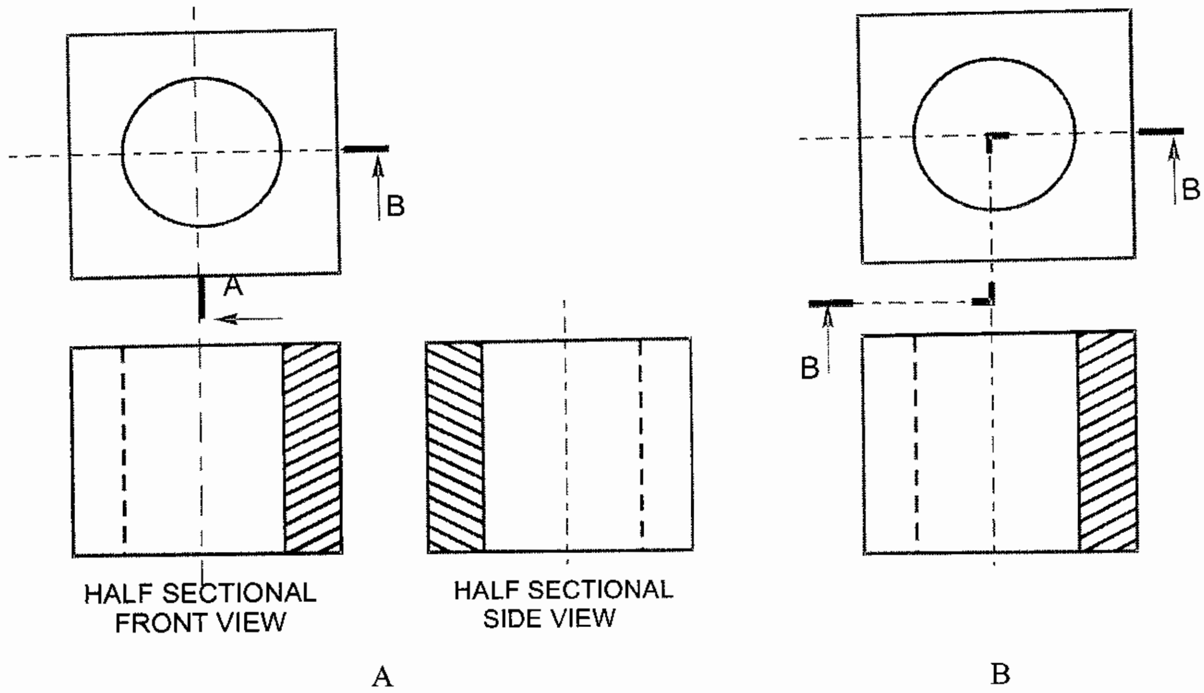

Fig 8.5 Half section

Fig. 8.5. shows half sectional views of an object under section by different types of cutting planes.

The cutting planes pass through both the centre lines of the object. The left front quarter portion of the object is imagined to be removed. The half sectional view is obtained in the front view. The cutting plane line and the direction of viewing are shown in the adjacent view.

8.4.3 Offset section

In full section, the cutting plane is straight and passes through the centre of the object. In some objects, this cutting plane does not expose all the required details. So, the cutting plane is offset to change its direction and allowed to pass through the required details of the object. The view obtained is called **offset section.** The offset in the cutting plane should be at 90°.

Fig 8.6 shows the offset section and the resultant sectional view. Note that the cutting plane is allowed to bend at 90° to pass through the required details.

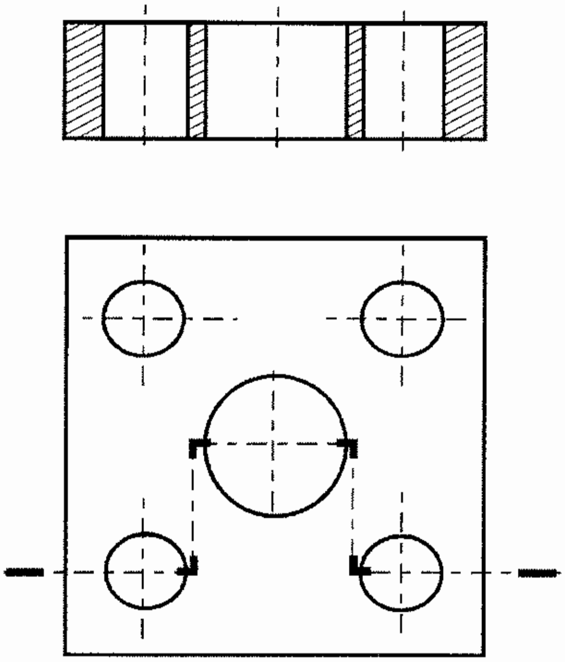

Fig 8.6 Off-set section

8.4.4 Revolved section

In some cases, a drawing may have several long structural parts of different cross–sections. It will be very difficult to identify the cross-section of such parts. In such cases, the section of each member is obtained by passing the cutting plane perpendicular to the axis or centre line. The obtained section is revolved by 90° through the axis to show the view perpendicular to the cutting plane. Revolved sections are used to show the section of elongated objects like connecting rods, long bars of different cross-section and ribs of pulleys.

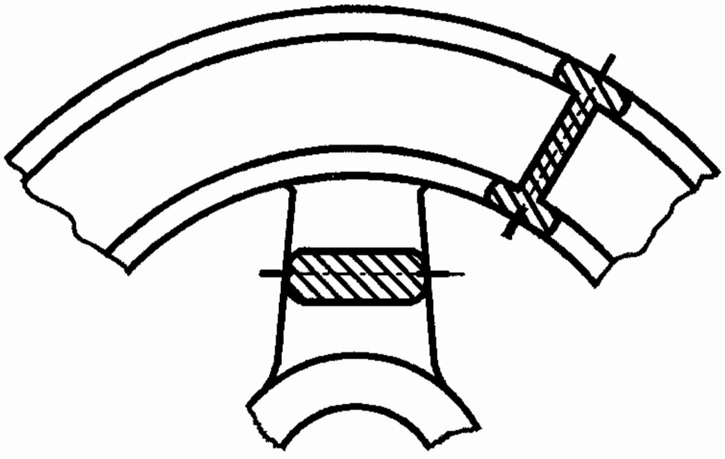

Fig 8.7 Revolved section

In *Fig 8.7*, it is shown how to allow the cutting plane. It also shows the sectional view revolved by 90°.

8.4.5 Removed Section

Removed section is obtained in a similar manner as revolved section. The cutting plane passes perpendicular to the centre line or axis of the object. The obtained section is revolved by 90° about its centre. The view which is perpendicular to the cutting plane is shown in a adjacent place on the drawing. The location of the section is indicated by a cutting plane line with reference letters.

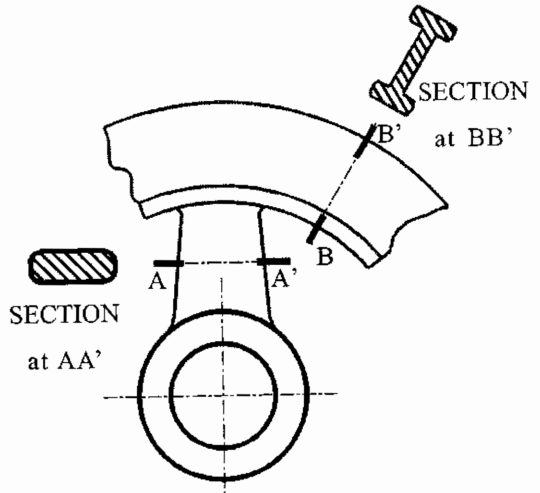

Fig 8.8 Removed section

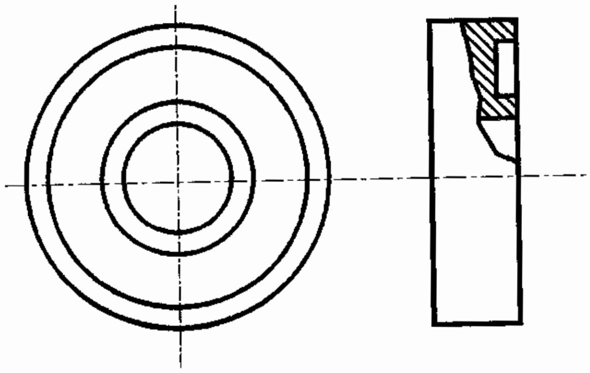

Fig 8.9 Partial section

8.4.6 Partial Section

When a small hidden detail of an object is to be shown in section, it is not necessary to draw full or half sectional view. In such cases, only a partial section is enough. The object is assumed to be broken at the required location to show the inner details. The section is bounded by a short irregular break line. It is also called **broken out section.**

8.4.7 Thin Section

When parts such as steel structural shapes, sheet metal, packings and gaskets are sectioned, the sectioned area is very small. In such cases, sectional lines can not be drawn. They are shown as blackened in sections and a thin white space is left between adjeacent parts in section.

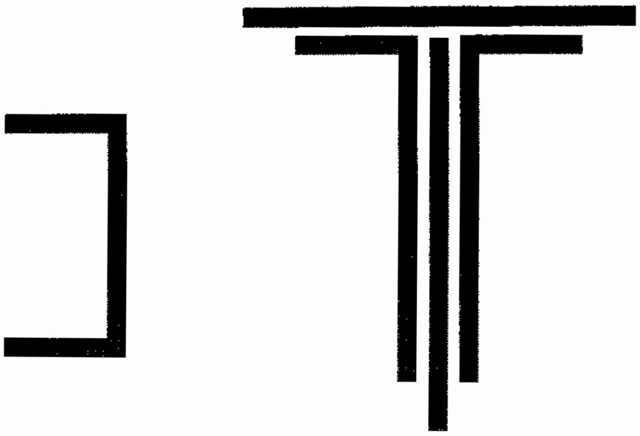

Fig 8.10 Thin section

8.5 Conventional representation of various materials in section

Sl. No	Material	Conventional representation
1.	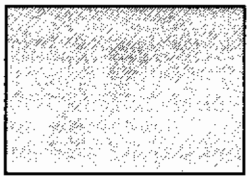	Cast Iron Steel Brass
2.	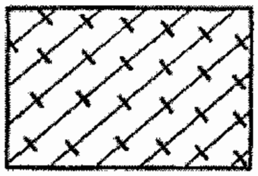	Lead Aluminium
3.	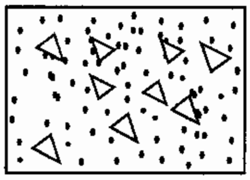	Concrete
4.	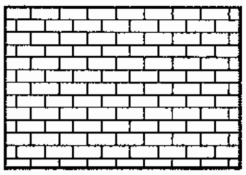	Brick work
5.	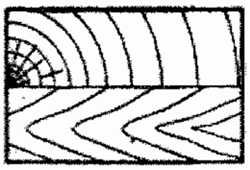	Wood
6.		Glass
7.	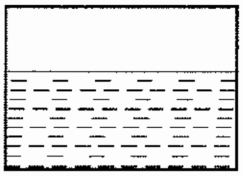	Liquids
8.	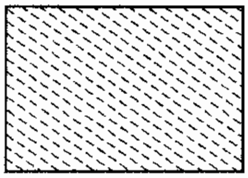	Fiber

8.6 Conventional representation of various parts in section

Sl. No	Parts	Conventional representation
1.	Shafts	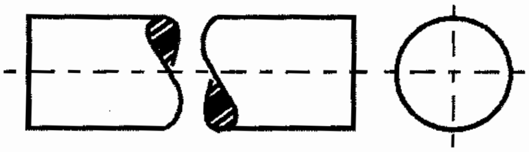
2.	Pipes	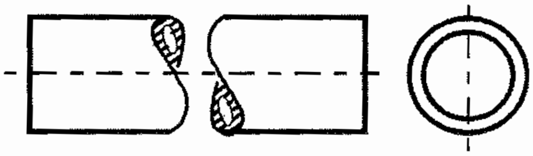
3.	Bars	
4.	Arms of pulley	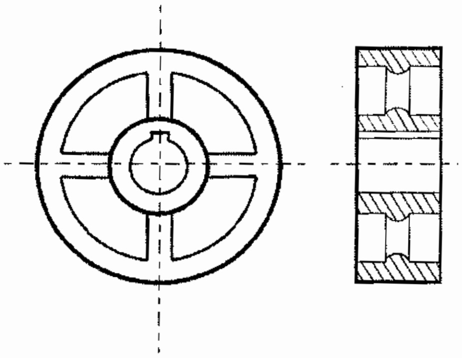
5.	Rivets	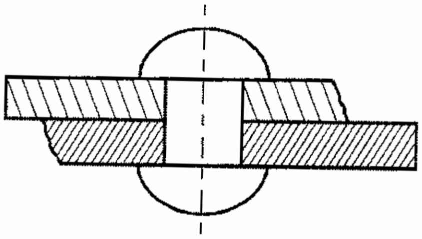
6.	Keys & Cotters of shafts	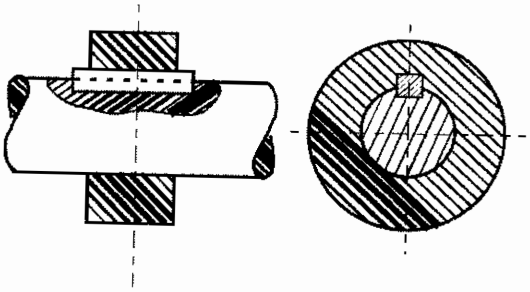

QUESTIONS

I A. Choose the correct option

1. The lines used to show the hidden details of a drawing are known as
   - a. centre lines b. sectional lines
   - c. dotted lines d. hatching
2. The sectioned portion of the object is indicated by
   - a. dimension lines b. hatching
   - c. hidden lines d. centre lines
3. The cutting plane angle of full sectioon is
   - a. 180^0 b. 90^0 c. 60^0 d. 45^0
4. The section of a connecting rod is generally shown in
   - a. half section b. revolved section
   - c.local section d. off-set section
5. The method showing the section of an object adjacent to its view is
   - a. half section b. revolved section
   - c.local section d. removed section

I B. Answer the following questions in one or two words

1. What is the process of drawing sectional lines known as ?
2. How is the direction of viewing of a sectioned object represented in a drawing ?
3. How is a cutting plane indicated in a drawing ?

II. Answer the following questions in one or two lines

1. What are the objectives of a sectional view ?
2. What is a cutting plane ?
3. What is a sectional view ?
4. Write short notes on sectional lines.
6. What are the types of half sectional views ?
7. What is off-set section ?
8. What is thin section ?
9. Draw the conventional representation of a. Lead B. Aluminium c. Wood

III. Answer the following questions in about a page

1. List the guidelines to be followed in drawing sectional lines ?
2. What are the types of sectional views ?

IV. Answer the following questions in about a page

1. Explain full section with an illustration.
2. Explain half section with an illustration.
3. Explain off-set section with an illustration.
4. Draw the orthographic views of the sectional views given below with approximate dimensions.

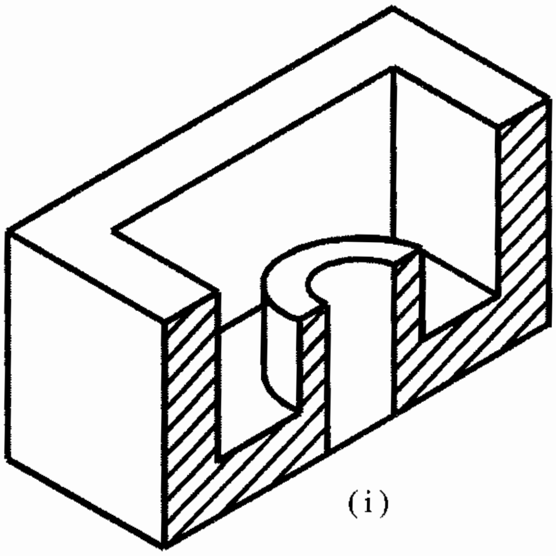

(i)

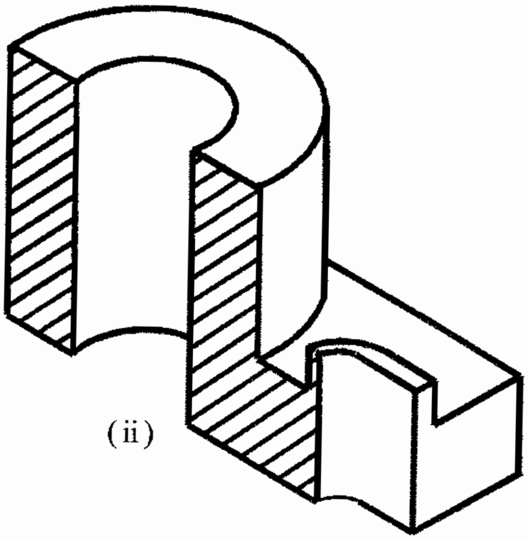

(ii)

9. FASTENERS

9.1. Introduction

A fastener may be defined as a machine element used for holding (or) joining two (or) more parts of a machine or a structure. The process of joining the parts is known as fastening. There are two types of fasteners namely

1. Temporary fasteners
2. Permanent fasteners

Temporary fasteners are useful in joining the parts temporarily. The parts can be separated when required without any damage. It is commonly used where the parts are assembled and disassembled repeatedly. The strength of the temporary fasteners is limited.

Screws, bolts, nuts, studs, keys, cotter pins and couplings are some examples of temporary fasteners.

The permanent fasteners are utilised when the parts are necessary to be joined permanently. It is impossible to separate the parts without any damage to them. But the strength of joint is more.

Welded and riveted joints are some examples of permanent fasteners.

9.2. Threads

Threads are first developed by Sir Joseph Whitworth of England in the year 1841.The form developed by him is known as British Standard Whitworth.

Threads are one of the several methods of fastening two or more components temporarily. A thread is a helical groove cut on the cylindrical surface of a round rod or a hole.

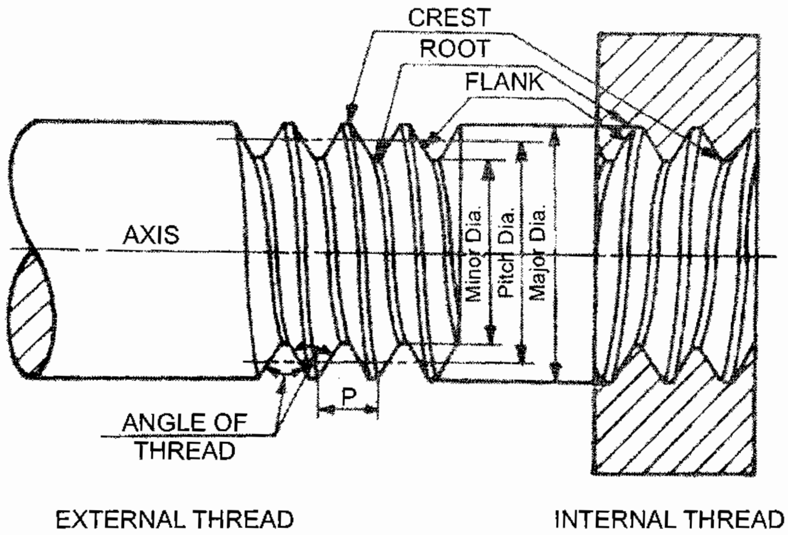

Fig 9.1 Nomenclature of thread

9.2.1. Nomenclature of threads

Major Diameter

This is the largest diameter of a screw thread, touching the crests of an external thread or the roots of an internal thread.

Minor Diameter

This is the smallest diameter of a screw thread, touching the roots or core of an external thread (or) the crests of an internal thread.

Pitch Diameter

This is the diameter of an imaginary cylinder passing through the threads at the points where the thread width is equal to the space between the threads.

Pitch

Pitch is the distance measured parallel to the axis, between corresponding points on adjacent screw threads.

Lead

Lead is the distance a screw advances axially on one full revolution.

Flank

Flank is the straight portion of the surface, on either side of the screw thread.

Crest

It is the peak edge of the screw thread that connects both the flanks of a thread at the top.

Root

It is the bottom edge of the thread that connects the adjacent flanks at the bottom.

Angle of thread

This is the angle included between the flanks of the thread, measured is an axial plane.

9.2.2. Right hand thread, Left hand thread

Right hand thread

When the axis of the screw is horizontal, if the slope of the thread lines are towards the right hand side, then the thread is called right hand thread. A right hand thread advances into a threaded hole when turned clockwise.

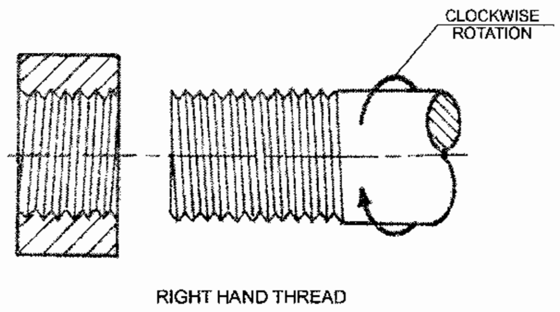

Fig 9.2 Right hand thread

Left hand thread

When the axis of the screw is horizontal, if the slope of the thread lines are towards the left hand side, then the thread is called left hand thread. A left hand thread advances into the nut when turned is a counter clockwise direction.

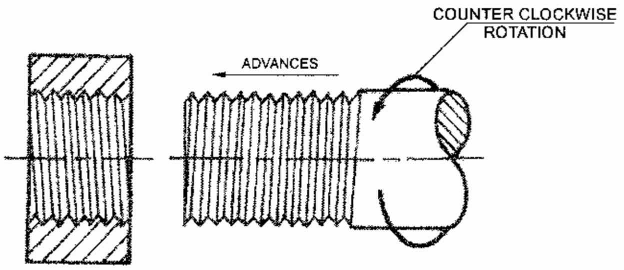

Fig 9.3 Left hand thread

9.2.3. Single start thread, Multiple start thread

Single start thread

When only one helix forming the threads, run on a surface, it is called a single start thread. It is called single start thread also because only one starting point is seen on the beginning of the threaded portion. In a single start thread, the pitch is equal to the lead. Threads are always single start unless or otherwise specified.

Multiple start thread

When two or more helices forming the threads run side by side on the cylindrical surface, it is called multiple start threads. It is called as a multiple start thread also because two or more than two starting points are seen at the beginning of the threaded portion. In double start threads, the lead is twice the pitch, in triple start threads, the lead is three times the pitch and so on.

Lead = number of starts x pitch

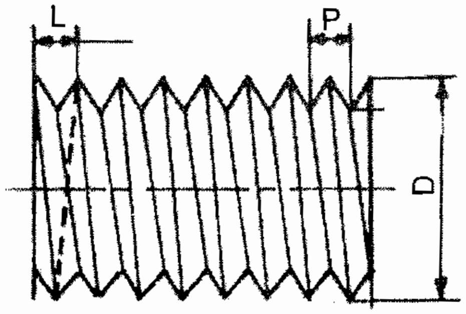

SINGLE START THREAD

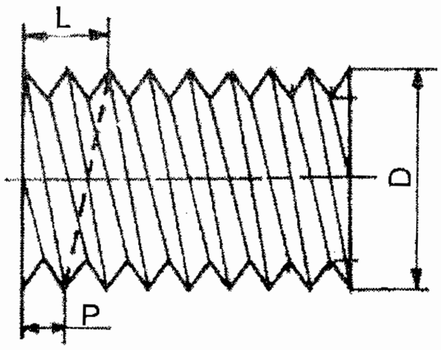

DOUBLE START THREAD

P - PITCH L - LEAD
D - MAJOR DIAMETER

9.4 Single start and double start thread

Uses of multiple threads

Multiple threads are used wherever quick motion is required and application of great force is not allowed. Example: on fountain pens, bottles, tooth paste caps, valves, power press screws and vice screws, etc to impart quick action in opening and closing.

9.3. Forms of thread

British Standard Whitworth thread (BSW)

This form of thread is used as a standard thread in Britain. It is the modified form of "V" thread having angle of 55^0.

The theoretical depth of BSW thread is 0.96 P (P - Pitch of the thread). $1/6^{th}$ of the theoretical depth is rounded of both at the top and bottom of the thread.

British Standard Fine (BSF) and British Standard Pipe (BSP) threads have the same profile of the BSW threads. But they have finer pitch values and smaller depths. BSF threads find application in automobile and aircraft industry. BSP threads are used on pipes meant for gas, steam and water.

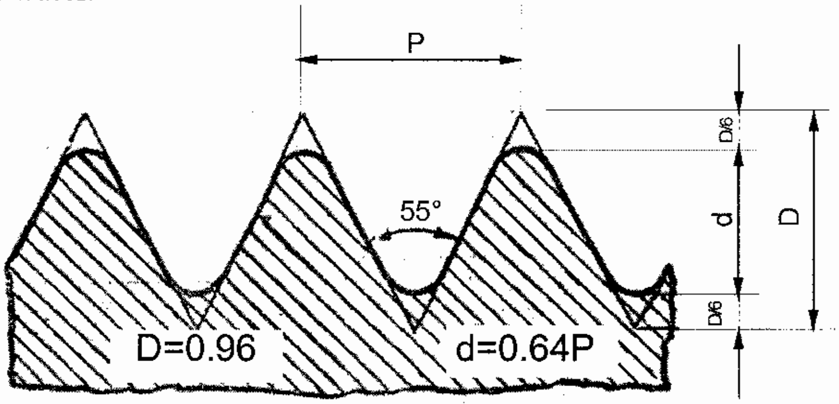

Fig 9.5 BSW thread

British Association thread (BA)

The angle of BA thread is $47½^0$. The theoretical depth of this form of thread is 1.136P. The actual depth of the thread becomes 0.6P after 0.236 of the theoretical depth is rounded of both at the top and bottom. This form of thread is generally used for small instrument screws having diameters less than ¼".

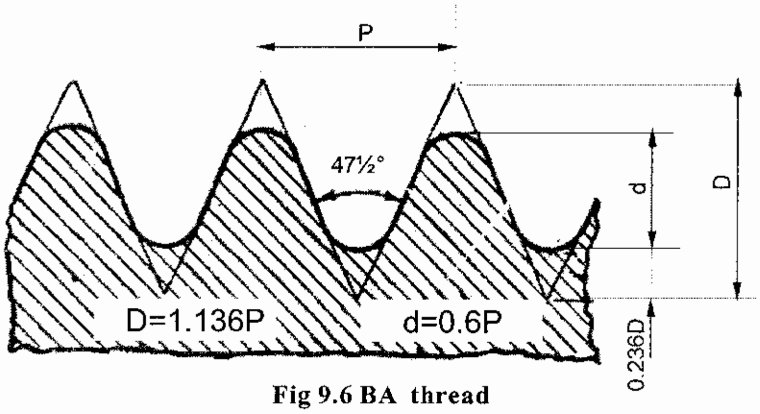

Fig 9.6 BA thread

Metric thread

The angle of metric thread is 60^0. The actual form of unified thread recommended by ISO is adopted as metric thread.

The theoretical depth of both external and internal threads of this form is 0.866P. The crests of the thread are cut parallel to the axis of the screw and roots rounded off to obtain the actual depth. Metric thread is designated by its major diameter and its pitch value. It is the most used form of thread in the industry.

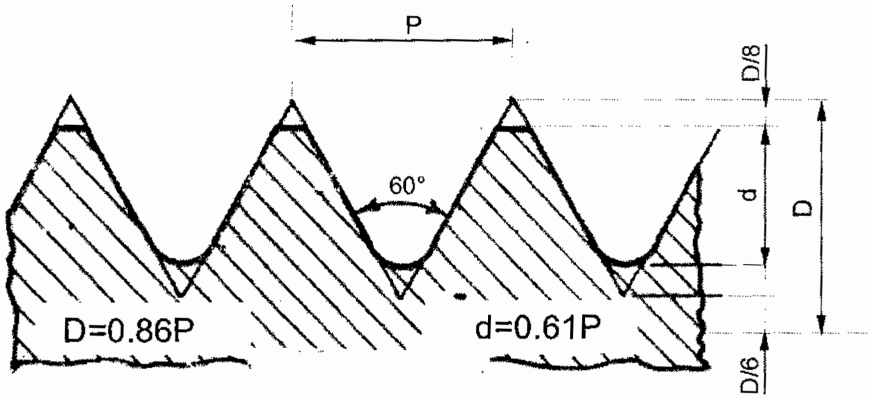

Fig 9.7 Metric thread

Square thread

The angle of thread is 90^0. The flanks and sides of the thread are at right angles to the axis of the thread. The depth and thickness of the thread are equal to half the value of its pitch. It is generally used for transmission of power and for obtaining large axial movement of the nut.

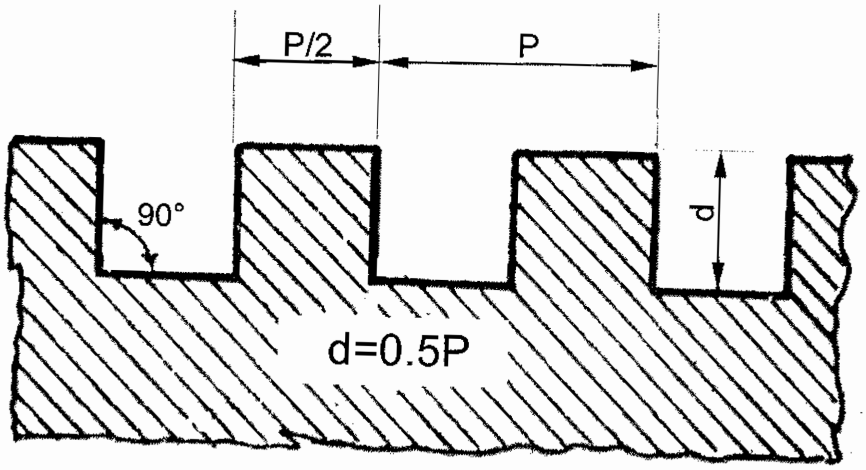

Fig 9.8 Square thread

Acme thread

The angle of the thread is 29°. It is a modification of square thread. It is stronger than square thread as its root is wider and is easy to cut. The shape of this thread enables easy engagement of spilt nuts and is therefore used in lathe leadscrews, radial drilling machine etc.,

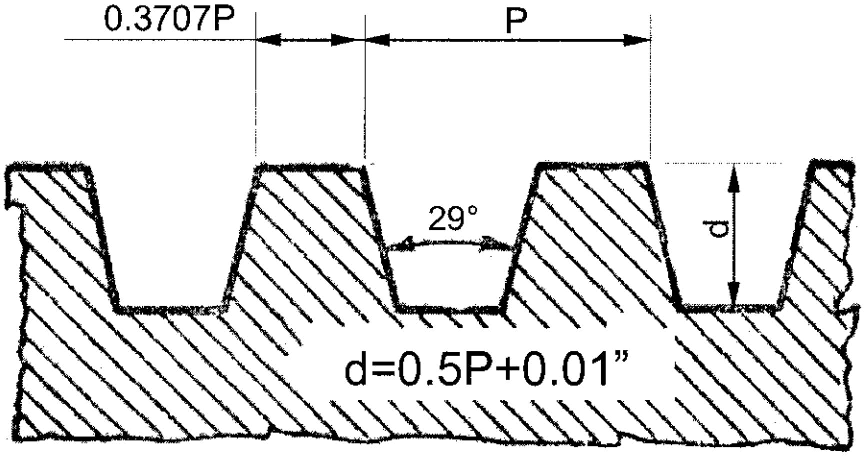

Fig 9.9 Acme thread

Knuckle thread

This thread is also a modification of square threads. It is formed by rounding off the corners of square thread so that it has a complete rounded profile. The section of the knuckle thread shows semicircles of radius, R = 0.25P. The depth of the thread is 0.5P. It can withstand heavy wear and rough usage.

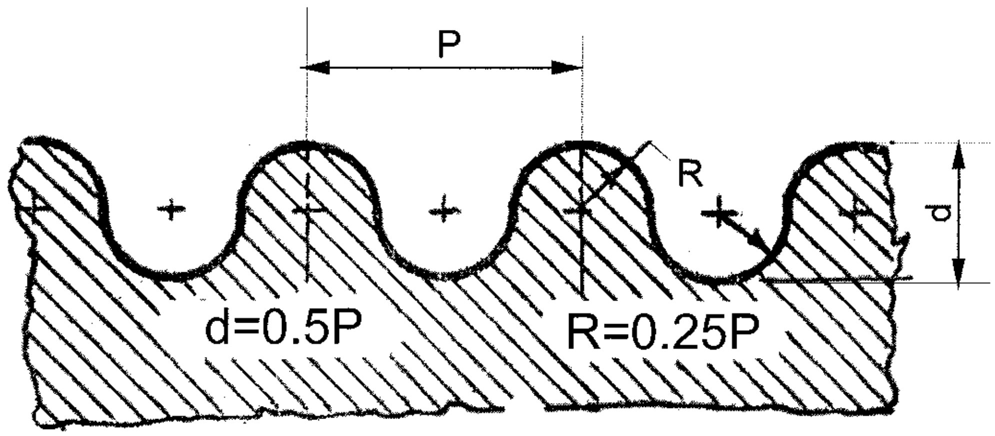

Fig 9.10 Knuckle thread

Buttress Thread

Buttress thread is a combination of square and V thread. One flank of the thread is at right angles to the axis. The angle between the two flanks is 45^0. The theoretical depth is equal to its pitch value. $1/8^{th}$ of the theoretical depth is cut off parallel to the axis at both crest and root. Because of its shape, It is useful in transmitting power in one direction.

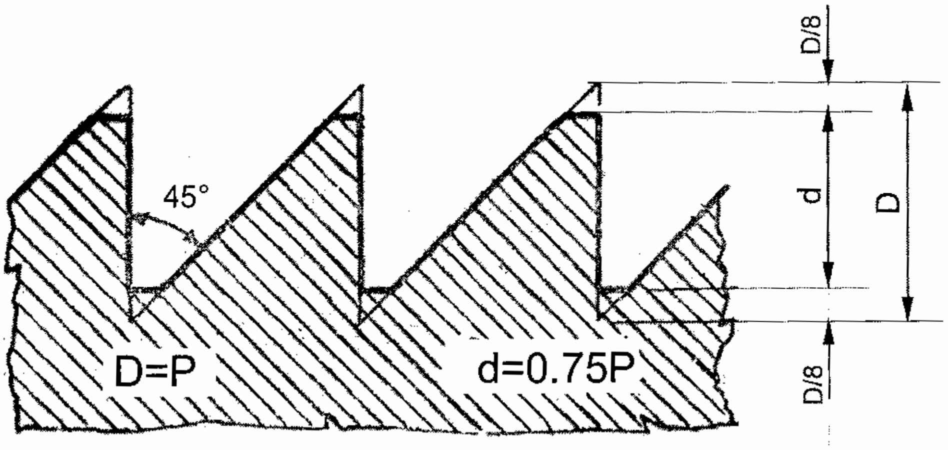

Fig 9.11 Buttress thread

9.4. Bolts, nuts and washers

A screw pair consists of a nut and a bolt. This pair is useful in fastening parts or components used in engineering construction.

9.4.1 Bolts

A bolt is a threaded shaft which comprises of two parts known as a shank and a head. The shank is cylindrical and is threaded at the tail end for sufficient length. The shape of the head differs with the purpose of the bolts.

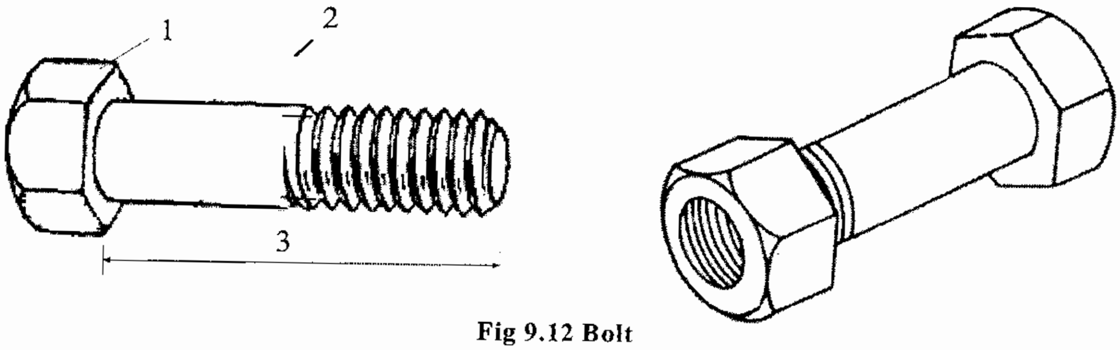

Fig 9.12 Bolt

1. Head 2. Shank 3. Length of the bolt

Some important types of bolts are

i) Through bolt
ii) Tap bolt
iii) Stud bolt

Through bolt :

Through bolts are used to connect two parts which have unthreaded holes on them. The bolt is inserted into the holes and the other end is tightened with a nut.

Tap bolt :

This type of bolt is used when one of the connected parts have a threaded hole.

Stud bolt :

Bolts that do not have an head is called as stud bolt. The neck of the bolt may have a collar or a square section. Stud bolts are useful in connecting two parts of which one has a hole and the other has a threaded hole. Stud bolt is tightened into the threaded hole with a spanner operating on the square neck of the bolt. The other part is inserted and the joint is effected by tightening the nut.

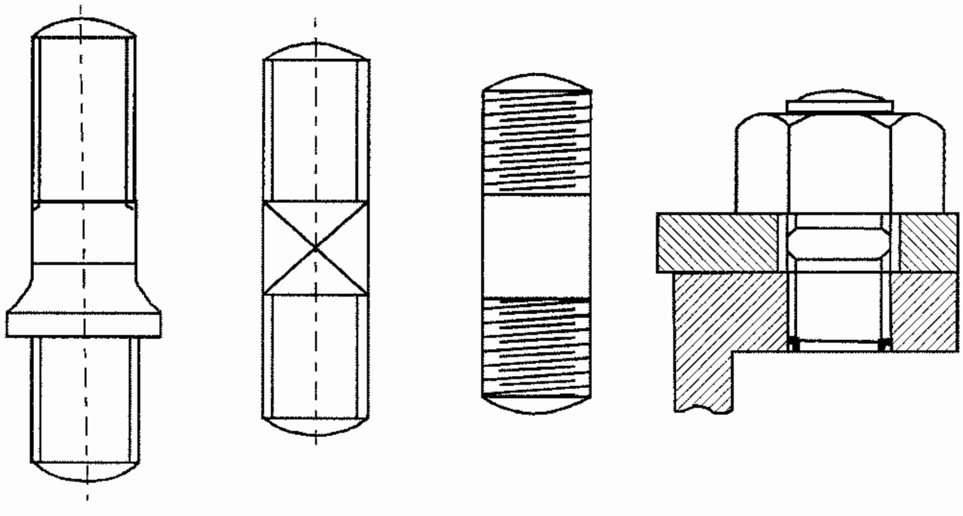

A B C D

Fig 9.13 Stud bolt

A, B & C - Types of stud bolt D - Stud bolt in assembly

9.4.2 Nuts

A device used with a bolt or a stud to join two or more parts together temporarily is known as a nut. Nut is a square or hexagonal shaft having a through hole which is threaded.

In order to ensure proper joint of the connection, a split pin is inserted into a hole made across the bolt diametrically. In slotted nut and castle nut a slot is made to accommodate the split pin.

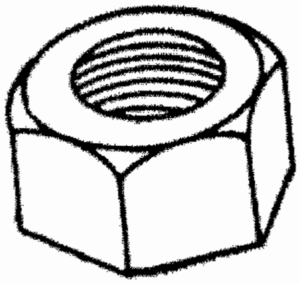

Fig 9.14 Hexagonal nut

9.4.3 Washers

A circular disc of metal having a central hole for inserting a bolt or a stud is known as a washer. It is placed below a nut to provide a perfect seating for the nut. The force taken by it is evenly distributed over a large surface area. It helps in screwing the nut more tightly. Different types of washers like plain washers, chamfered washers and spring washers are in general use.

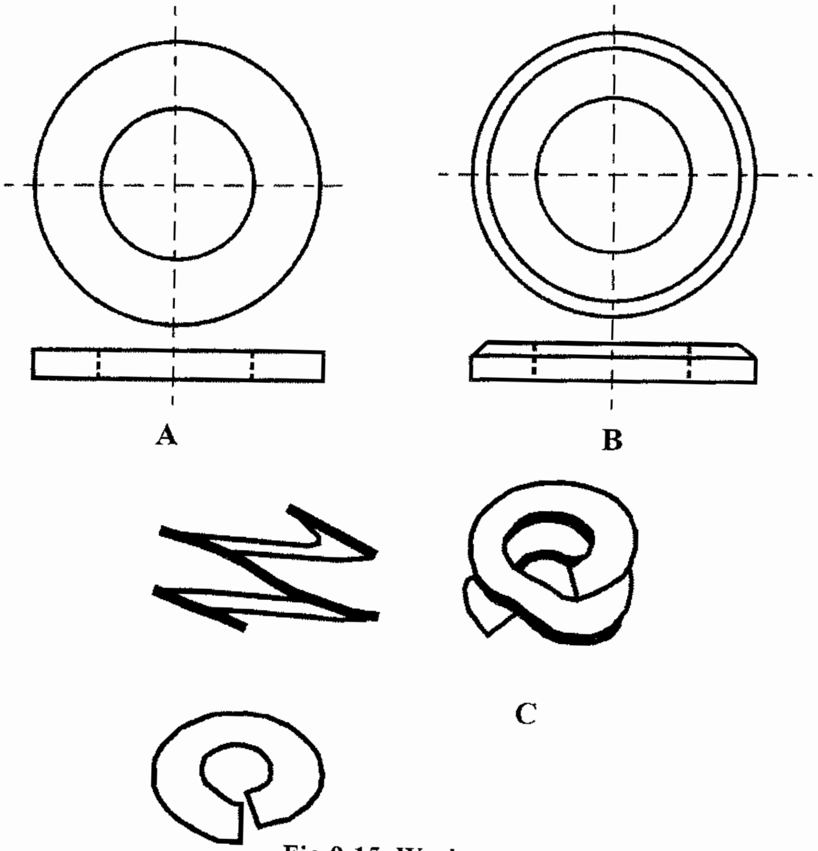

Fig 9.15 Washers

A- Plain washer B- Chamfered washer C- Spring washer

9.5 Methods of representing threads in drawings

THREADS	BIS CONVENSION
External V-Thread, Single Start right hand	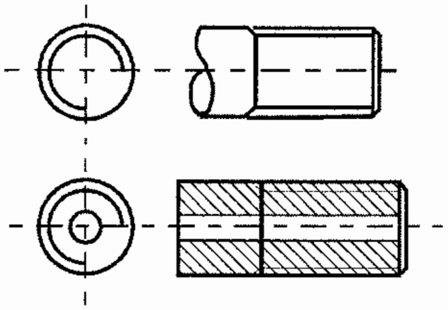
Internal V-Thread	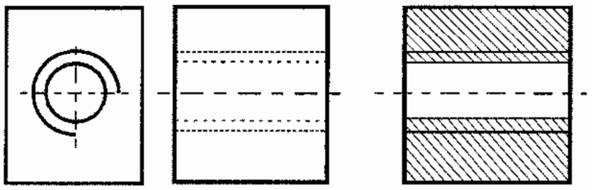

Fig 9.16 Methods of representing threads in drawings

9.6. Keys

Keys are machine elements used to connect a shaft and the parts mounted on it such as pulleys, gears, wheels, couplings etc., and prevent relative rotational movement between them. It is subjected to shearing and torsion stresses and hence, it is always made of steel. It is inserted in the axial direction between the shaft and the hub or boss of the mating piece. The groove cut on the shaft as well as in the hub, to accommodate the key, is called a key way.

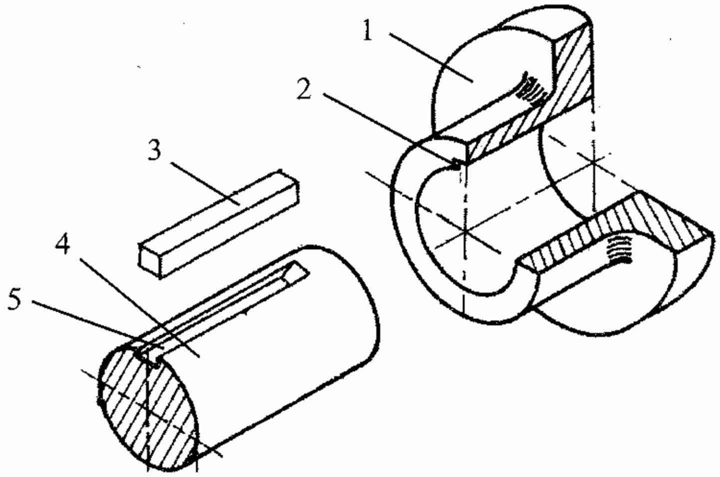

Fig 9.17 Key and keyway (Parallel sunk key)

1. Hub 2. Keyway in the hub 3. Key 4. Shaft 5. Keyway in the shaft

9.6.1 Classification of keys

1. Sunk keys
2. Saddle keys
3. Round keys

9.6.2. Sunk keys

This is a standard form of key and may be either of rectangular or square cross-section. The end may be squared or rounded. Generally, half the thickness of the key fits into the shaft keyway and the remaining half in the hub keyways.

Types of sunk keys

a. Parallel key b. Taper key
c. Gib headed key d. Feather key
e. Wood – ruff key

Parallel key

A parallel key is rectangular or square in cross – section and uniform in width and thickness throughout its length. These keys are generally used where pulleys, gears or other similar parts are secured to the shafts permitting relative axial movement. To achieve this, a clearance fit must exist between the key and the keyway in which it slides.

Taper key

A taper key is uniform in width but tapered in thickness. The bottom surface of the key is straight and the top surface is tapered. When inserted in its position, it prevents relative rotational as well as axial movement between the parts. The magnitude of the taper is 1 :100.

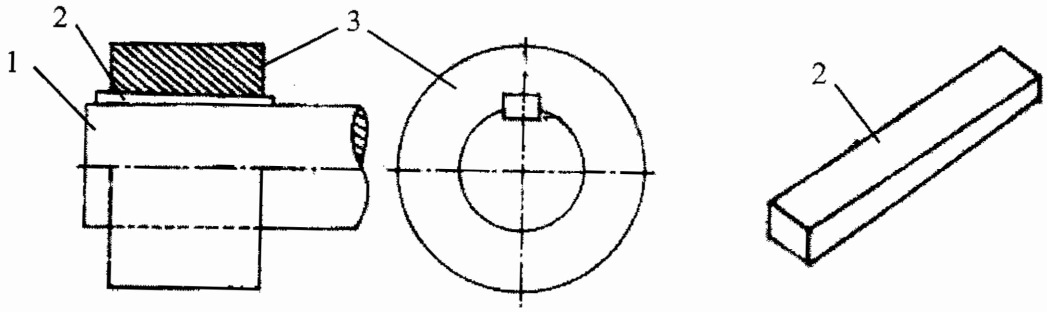

Fig 9.18 Taper sunk key

1. Shaft 2. Taper sunk key 3. Hub

Gib headed key

A taper key is removed by hammering at its thinner end. When that end is inaccessible, the key is usually provided with a head, called a gib – head to facilitate its removal. This type of key is used when the connected parts are to be separated occasionally for the purpose of repair or maintenance.

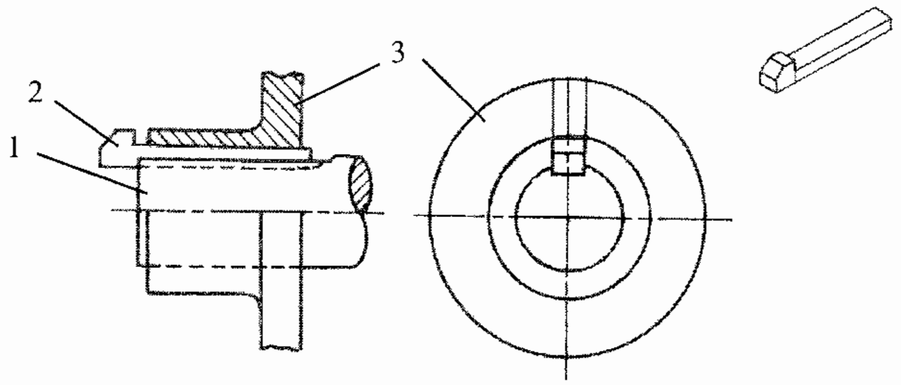

Fig 9.19 Gib headed key

1. Shaft 2. Gib headed key 3. Hub

Feather Key

A feather key is attached to one member of the pair, screwed to the shaft. Feather keys are parallel keys and permit relative axial movement of the pair. It may be rectangular, square, dove tail (or) rounded in cross section.

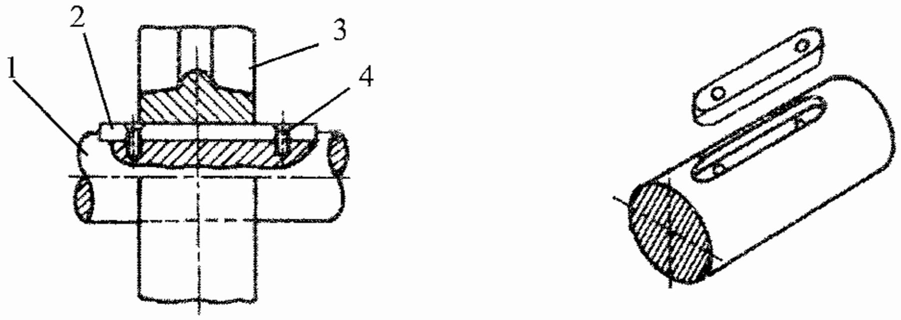

Fig 9.20 Feather key

1. Shaft 2. Feather key 3. Hub 4. Screw

Wood ruff key

This key is in the form of a segment of a circular disc of uniform thickness. It fits into a slot of corresponding shape cut in the hub of the wheel. The key and the slot in the shaft are of same radius so that the key can be adjusted to any taper. It is mainly used on tapered shafts of machine tools and automobiles.

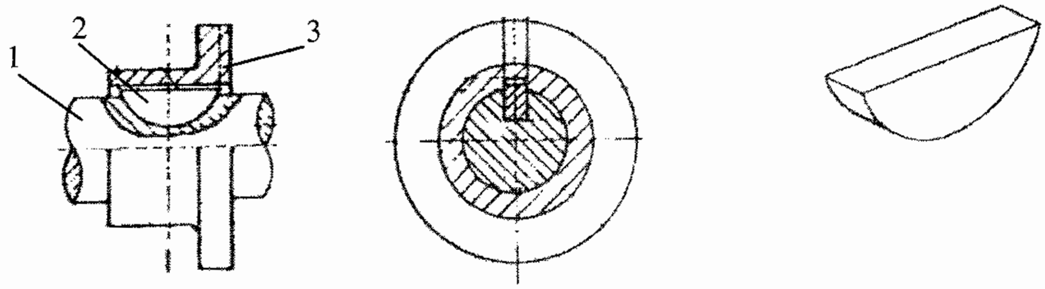

Fig 9.21 Woodruff key

1. Shaft 2. Woodruff key 3. Hub

9.6.2. Saddle Keys

It is a key with uniform width but tapering in thickness on the upperside. The magnitude of the taper provided is 1:100. Saddle keys are used for low power transmission.

These are made in two forms,

1. Hallow saddle keys
2. Flat saddle keys

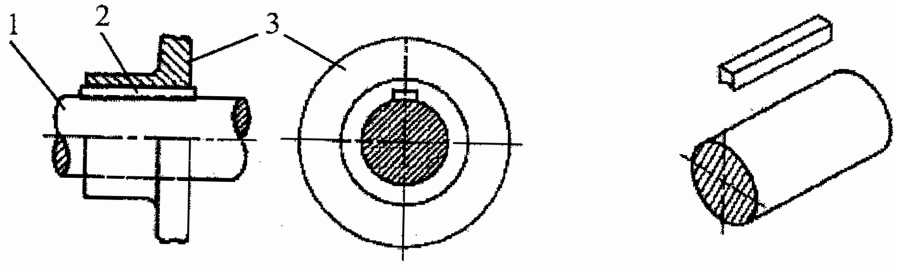

Fig 9.22 Hollow saddle key

1. Shaft 2. Hollow saddle key 3. Hub

Hollow saddle key

A hollow saddle key has a concave shaped bottom to suit the curved surface of the shaft, on which it is used. The keyway is only cut in the hub of the wheel. The relative rotation is prevented by the friction between the key and the shaft.

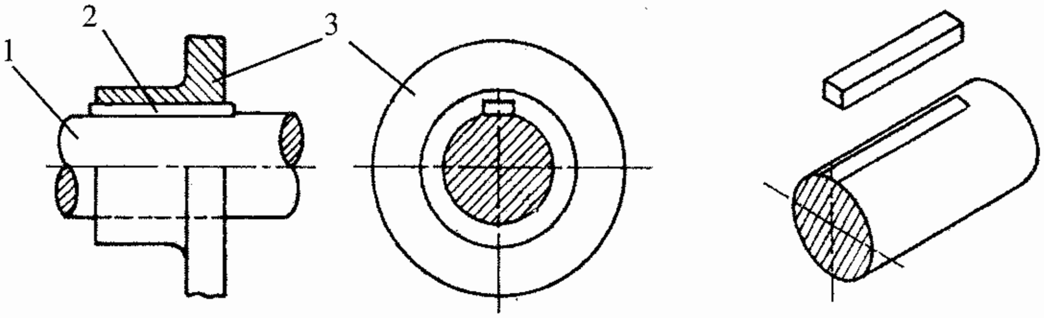

Fig 9.23 Flat saddle key

1. Shaft 2. Flat saddle key 3. Hub

Flat saddle key

It is similar to the hollow saddle key except that the bottom surface of it is flat. It fits on the flat surface provided on the shaft. It gives more secured fastening than a hollow saddle key.

9.6.4. Round Key

Keys of circular cross – section are called round keys, usually tapered (1:50) along the length. A round key fits in the hole drilled partly in the shaft and partly in the hub. The ends of the round keys may be curved or chamfered. The mean diameter of the pin may be taken as 0.25D. Where D is shaft diameter. It is generally used for light duty, where the loads are not considerable.

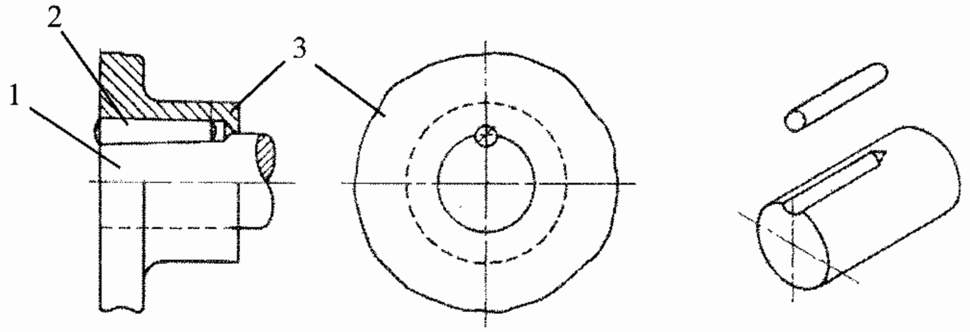

Fig 9.24 Round key

1. Shaft 2. Round key 3. Hub

9.7. Proportion of keys

Parallel key

Given d – diameter of the shaft

w – width of the key = d/4 = 0.25 d

t - Thickness of the key = 0.66w or d/6

l – length of the key = 1.5 d (minimum)

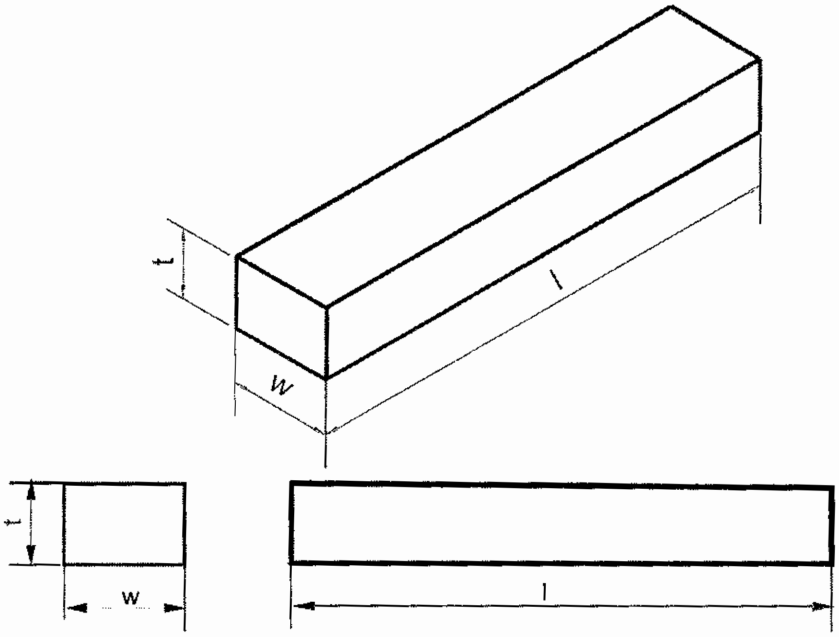

Fig 9.25 Proportion of parallel key

Gib headed key

Given d – diameter of the shaft

w – width of the key = d/4 = 0.25 d

t - Thickness of the key = 0.66w or d/6

h - height of the key = 1.75 t

b = breadth of the gib = 1.5 t

Angle of chamfer = 45^0

Standard taper = 1 : 100

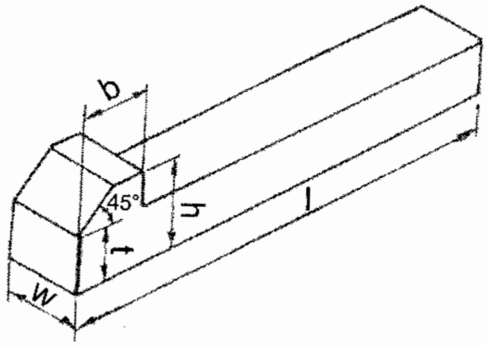

Fig 9.26 Proportion of Gib headed key

QUESTIONS

I . A. Choose the correct option

1. An example for permanent fastener is

    a. Welded joint b. Screwed joint c. Keyed joint d. Couplings

2. .... is a temporary fastener

    a. Welded joint b. Riveted joint c. Screwed joint d. Forging

3. Pitch of a screw is measured

    a. parallel to its axis b. perpendicular to its axis

    c. from the crest to the root d. from the root to the crest

4. The diameter of a screw touching the roots of the external thead is known as

    a. pitch diameter b. major diameter

    c. Minor diameter d. lead of the thread

5. The angle of the BSW thread is

    a. 29^0 b. 55^0 c. $47½^0$ d. 90^0

6. BSP and BSF threads have the same profile as

    a. BA thread b. Acme thread

    c. Buttress thread d. BSW thread

7. The angle of metric thread is

    a. 29^0 b. 55^0 c. $47½^0$ d. 60^0

8. Keys are used to

    a. prevent relative movement between shaft and pulleys

    b. actuate relative movement between shaft and pulleys

    c. prevent rotation

    d. to join pulleys and gears

I. B. Answer the following questions in one or two words

1. Who developed threads first?
2. What are the types of threads?
3. Give examples for temporary fasteners.
4. Give examples for permenant fasteners.
5. Lead= pitch x ....
6. Mention the types of washers.
7. What are keys made of ?
8. What are the types of saddle keys ?

II. Answer the following questions in one or two sentenses

1. What is meant by temporary fastener ?
2. Define 'pitch' of a thread.
3. What is a bolt?
4. What is a keyway ?
5. Mention the types of sunk keys.

III. Answer the following questions in about a page

1. Explain briefly about fasteners.
2. Draw and explain the nomenclature of a thread.
3. Explain 'Right hand thread' and 'left hand thread' with diagrams.
4. Explain the types of sunk keys.
5. Write the proportions of a Parallel key and Gib-headed key.

IV. Answer the following questions in detail

1. Explain the different forms of threads with suitable diagrams.
2. Explain the types of keys with suitable diagrams.

10. ASSEMBLY DRAWING

10.1. Introduction

A machine or mechanism may have a large number of simple to complex components. The shape and sizes of these components are decided by the designer. The designer's ideas are generally expressed by means of free hand drawings. Based on these drawings, detail and assembly drawings are made. The relation between various parts of the machine or mechanisms should clearly be understood for the purpose of the final design and production.

10.2. Assembly drawing

An assembly drawing may be defined as a drawing which shows all the parts of the machine assembled in their relative functional positions.

A detail drawing is a drawing which shows complete informations about the production of a part or a mechanism.

10.2.1. Informations to be furnished in assembly drawings

1. One main view to show the best assembly
2. Selected overall dimensions and important centre to centre distance
3. Identification of different parts on assembly drawing
4. Necessary sections
5. Parts list, notes, title block etc.

10.3. Classifications of assembly drawings

1. Design assembly drawing
2. Working assembly drawing
3. Sub assembly drawing
4. Installation assembly drawing

10.3.1 Design assembly drawing

An assembly drawing made at the designing stage while developing a machine is known as design assembly drawing. These are made to a larger scale so that the required changes or modifications may be thought of by the designer, keeping in view their functional requirements and appearance.

10.3.2 Working assembly drawing

These drawings are normally made for simple machines, comprising small number of parts. Each part is completely dimensioned to facilitate easy fabrication.

10.3.3 Sub assembly drawing

It is a assembly drawing of a group of related parts which form a part of a complicated machine. It is difficult to give the complete working assembly drawings of a entire machine but working parts or sub assembly drawings are necessary for each unit.

10.3.4 Installation assembly drawing

The drawing which shows how to install or erect a machine or structure is known as installation assembly drawing.

10.4 Procedure for making assembly drawing from details

In order to make assembly drawings from details, the following points are to be noted.

1. The relative positions of various parts are studied based on their function, shape and size.
2. Both the external and internal features of each part is studied.
3. Overall dimensions of assembly are calculated and a suitable scale is selected.
4. While making the front view, the main central part of the assembly is drawn first and the remaining parts are drawn in the sequence of assembly.
5. Other views are drawn making projections from front view.
6. Sections are shown in any of the views, if necessary.
7. Overall dimensions are marked and part numbers noted.
8. Parts list, title block are completed with necessary information.

QUESTIONS

I. Choose the correct option

1. The shape and size of a component are decided by
   - a. the worker
   - b. the supervisor
   - c. the designer
   - d. the manager
2. Detail and assembly drawings are made based on
   - a. freehand sketches
   - b. discussions
   - c. sectional views
   - d. orthographic views

II. Answer the following questions in one or two lines

1. What is an assembly drawing ?
2. What is a detail drawing ?
3. What are the informations to be furnished in an assembly drawing ?
4. How are assembly drawings classified ?

III. Answer the following questions in about a page

1. Write down the procedure for making assembly drawings from detail drawings.

Sample assembly drawings

The drawings in the next pages are given for the students to understand the method of making assembly drawing. They can also understand how the assembly drawings will look like.

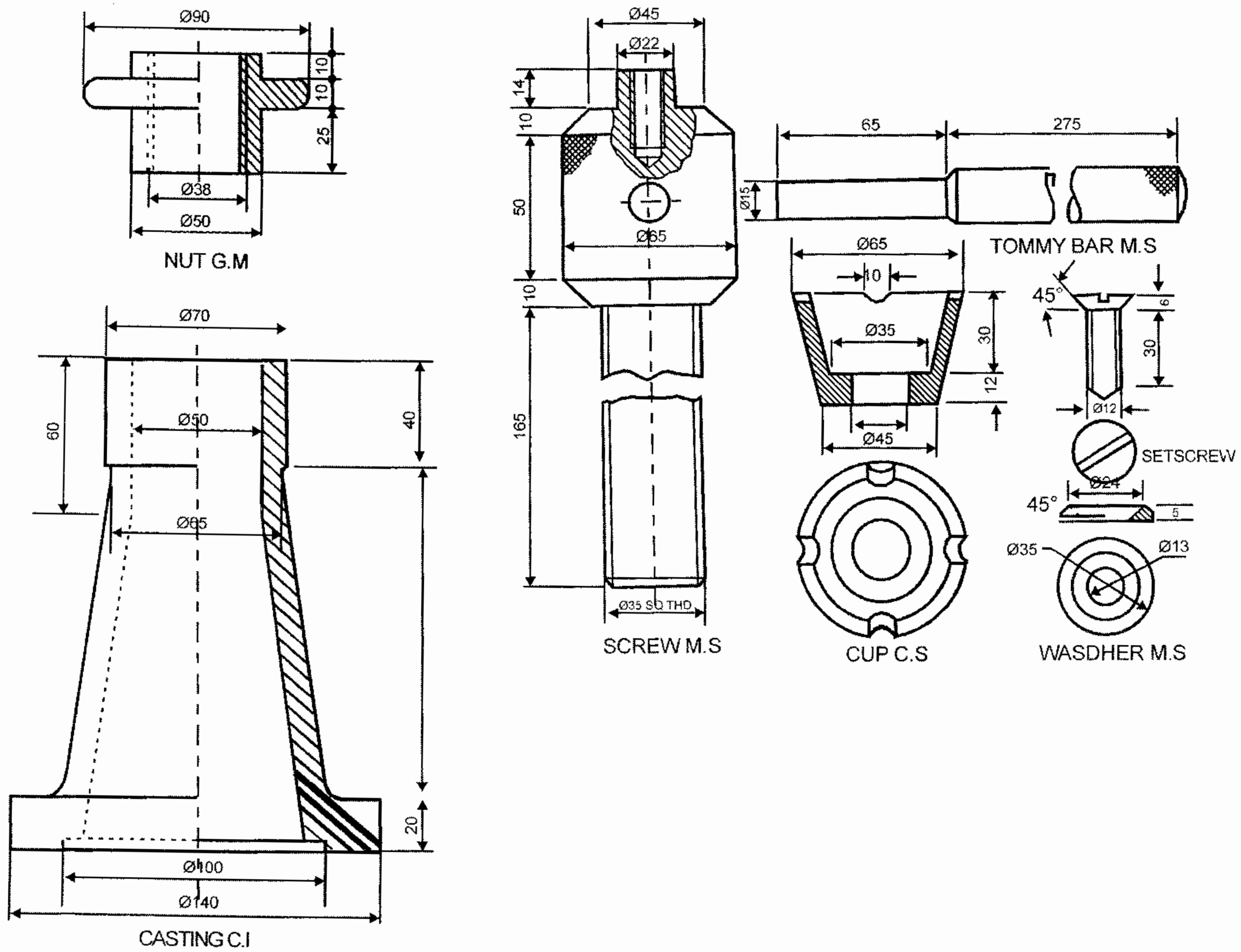

Fig. 10.1. Details of a screw jack

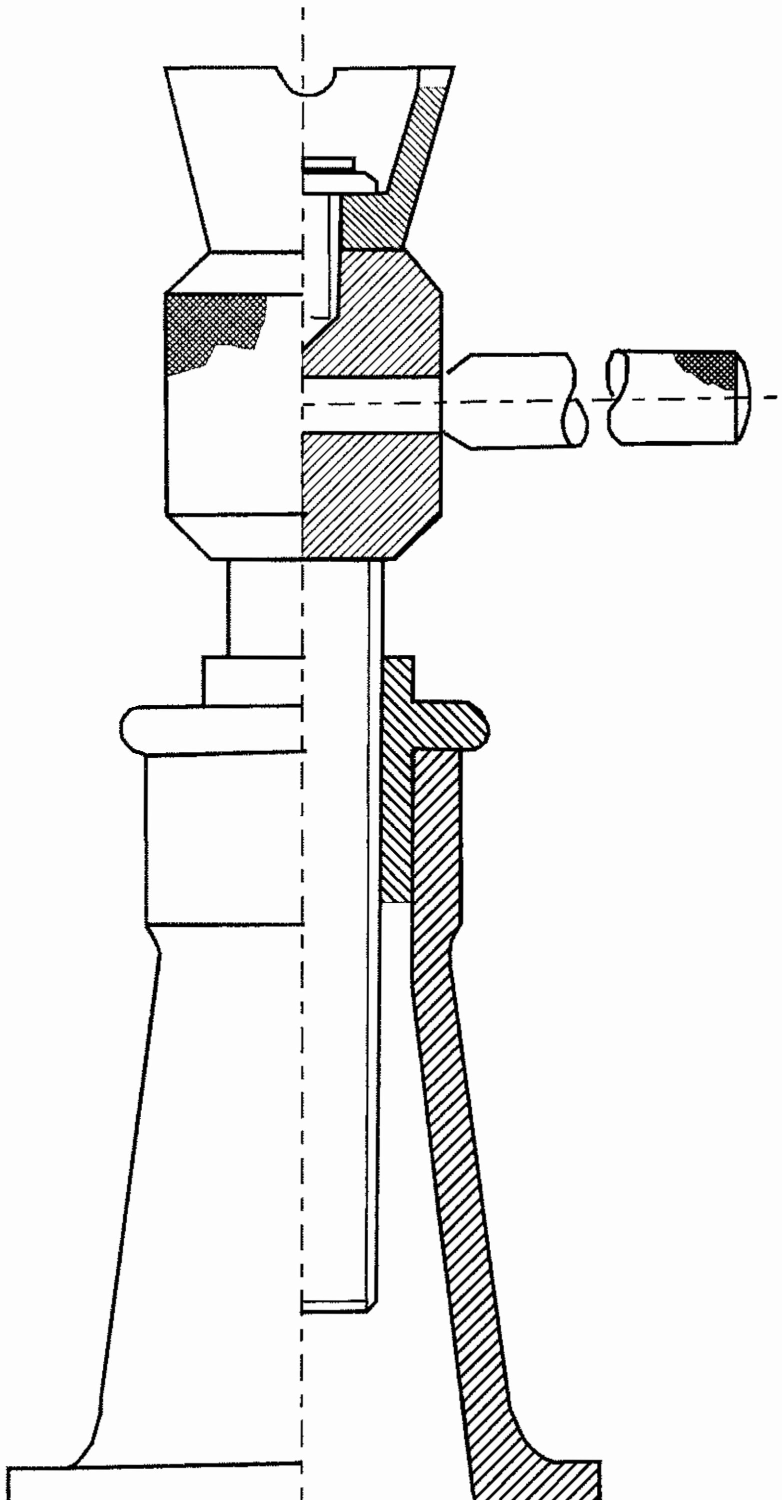

Fig. 10. 2 Assembly of parts of a screw jack

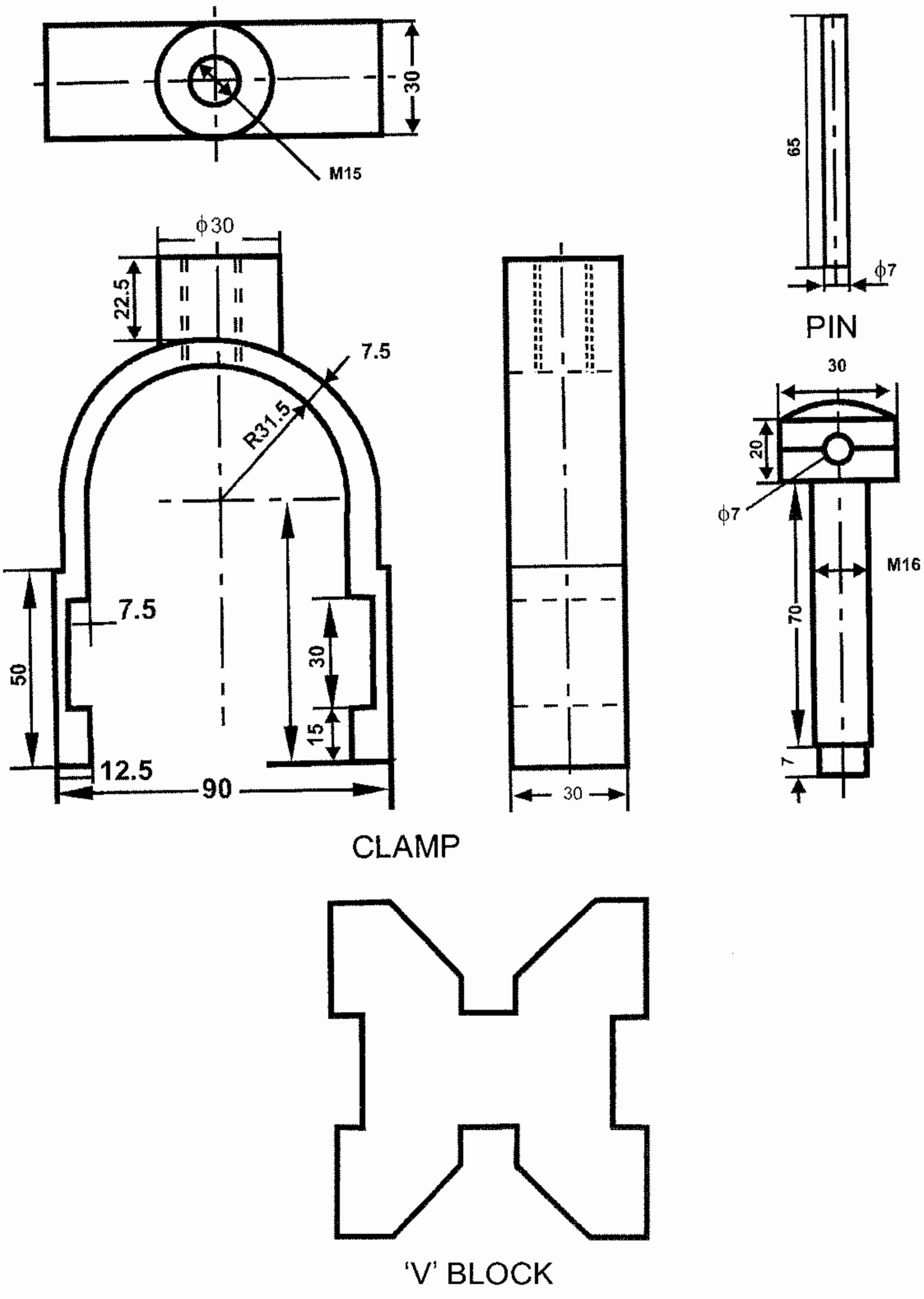

Fig. 10. 3. Details of a " V " block

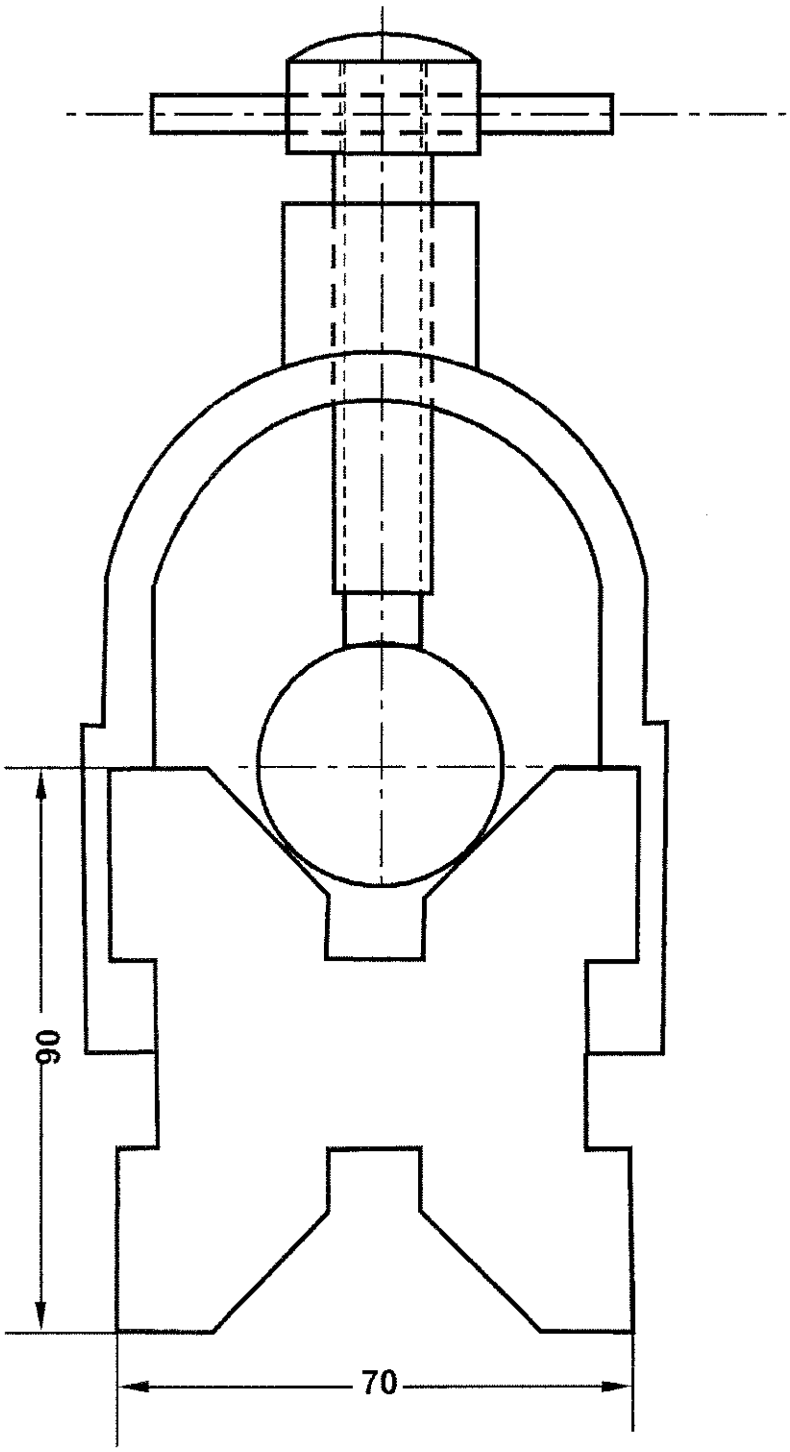

Fig. 10. 4. Assembly of a " V " block

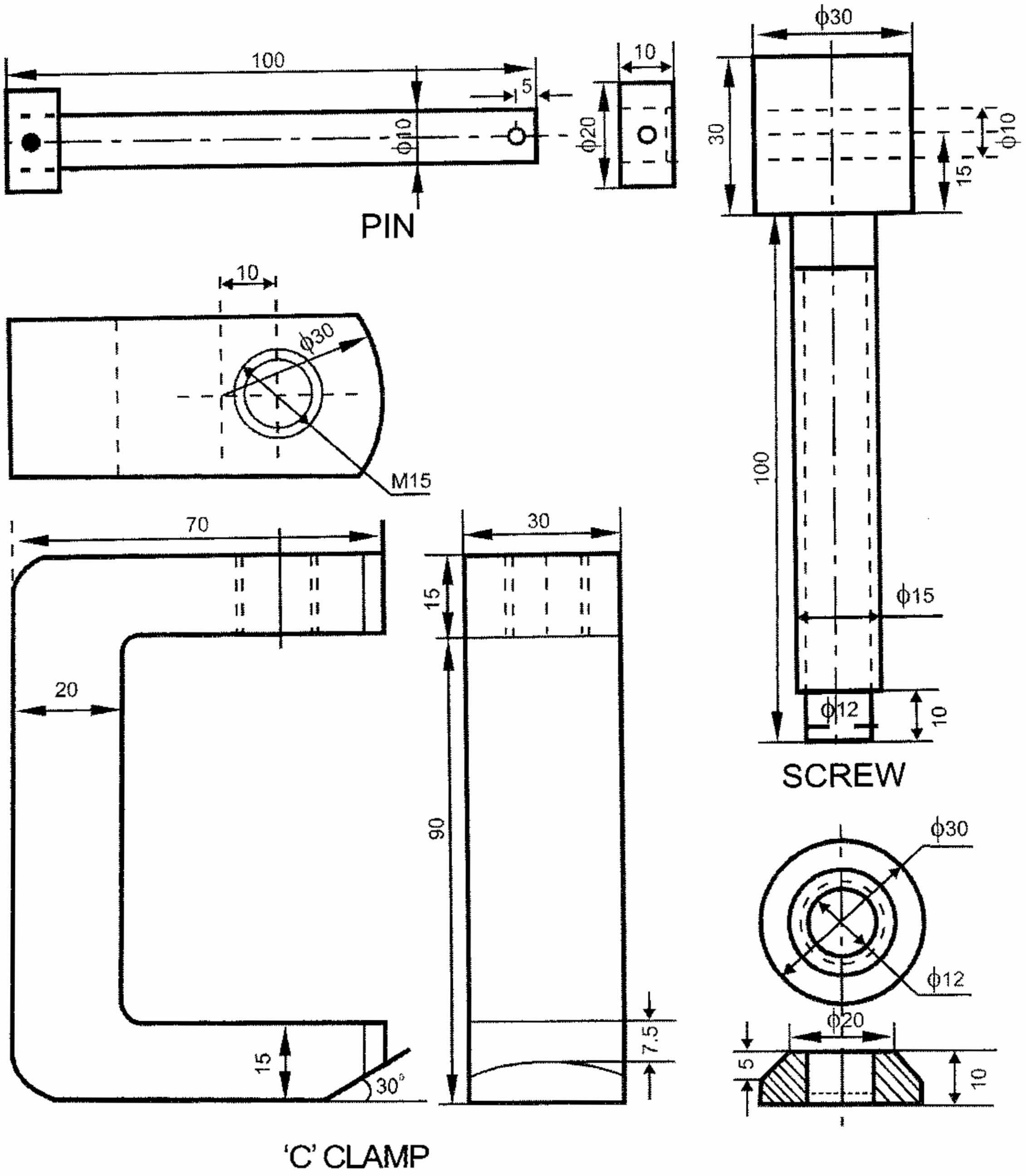

Fig. 10. 5 Details of a " C " clamp

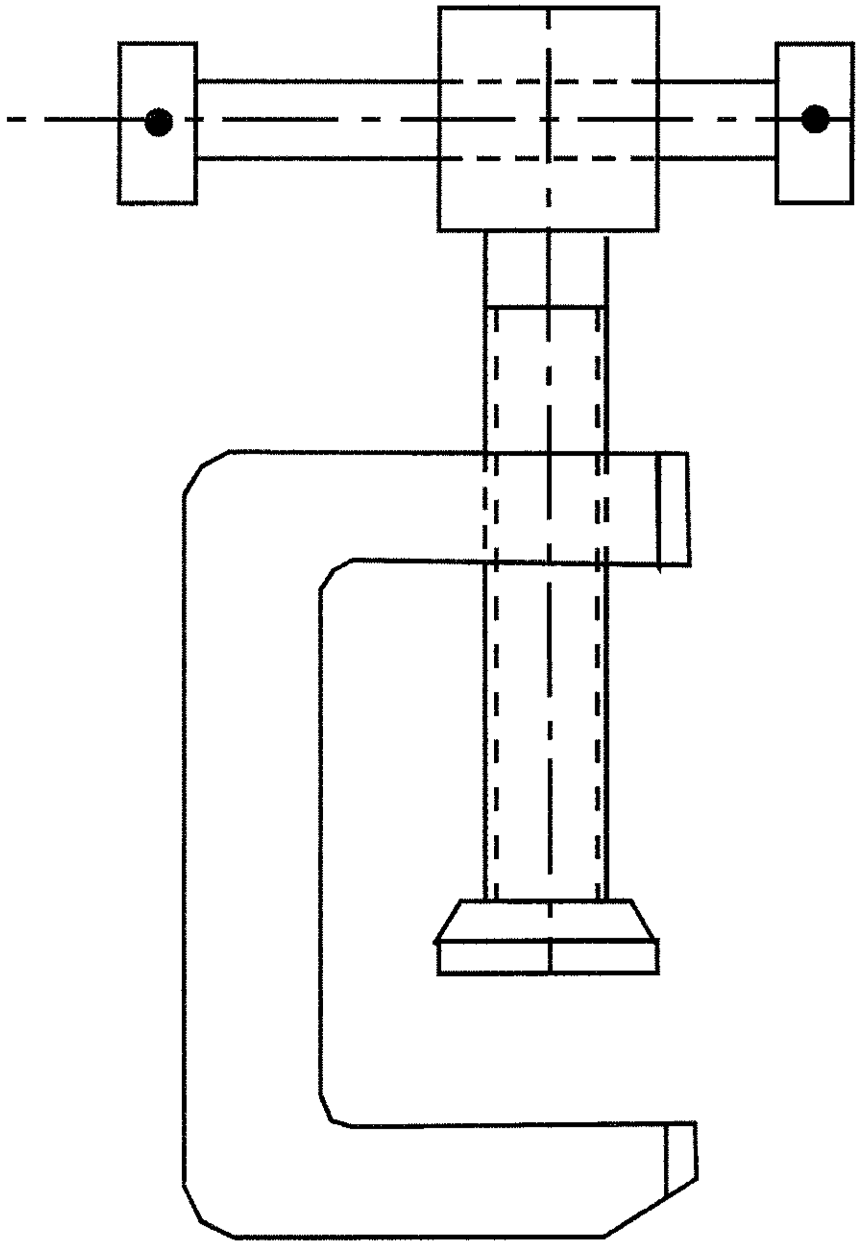

Fig. 10. 6 Assembly of a " C " clamp

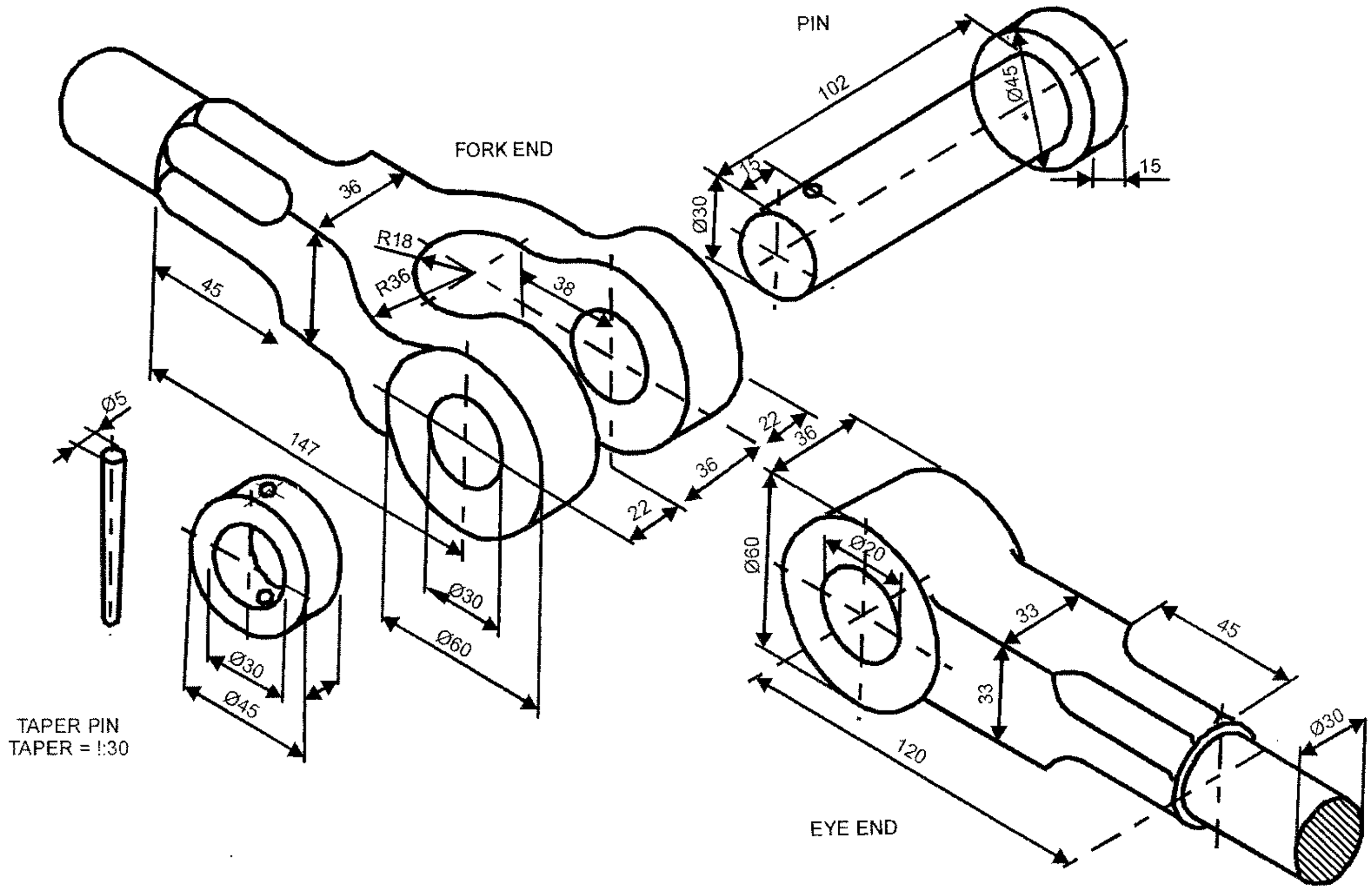

Fig. 10. 7 Details of a kuuckle joint

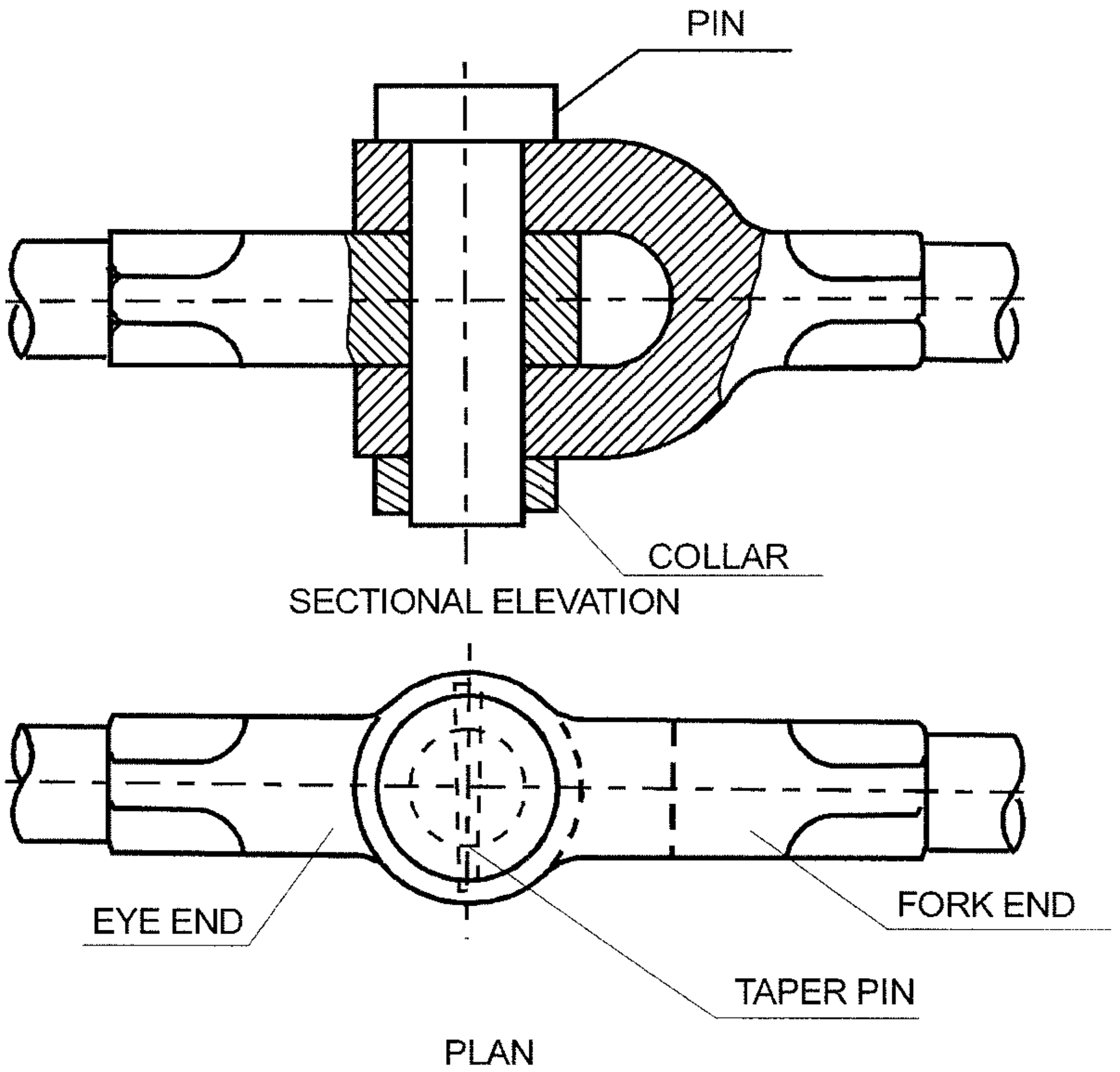

Fig. 10. 8 Assembled views of a kuuckle joint

11. DRAWINGS SYMBOLS AND BLUE PRINT READING

11.1 Introduction

So far we have discussed on different methods of construction of simple plane geometrical drawings and solid geometrical drawing. All along we have learnt about the drawing instruments, standard conventions about drawing sheets and the types of lines used in constructing drawings, lettering and dimensioning, constructing basic geometrical curves, scales used in drawings, the theory of projection - orthographic and isometric, sectional views and assembly drawings. It is also very important for an aspiring engineer to understand and read various drawings. A drawing may have different types of symbols and abbreviations in describing the components and production processes. An effort is made here to make the student aware of some simple and important symbols used in a drawing and the systematic study about reading drawings.

11.2 Machining symbols

Symbols used for indication of surface roughness

11.2.1 The basic symbol

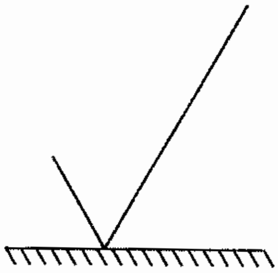

Basic symbol consists of two legs of unequal length inclined at 60^0 to the line representing the surface under consideration.

11.2.2 A bar added to the basic Symbol

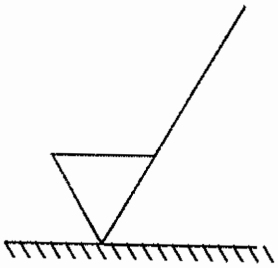

A bar is added to the basic symbol, if the removal of material from the surface is required.

11.2.3 A circle added to the basic symbol

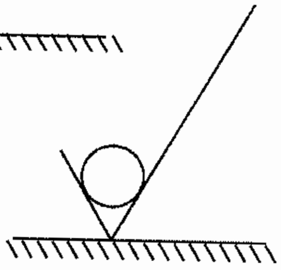

The removal of material from the surface is not permitted when circle is added to the basic symbol. This symbol also means that the surface is to be left in the state resulting from a preceding manufacturing process.

11.2.4 A horizontal line added to the basic symbol

A horizontal line is added to the basic symbol when some special surface characteristics have to be indicated. Mostly the production method is indicated above the horizontal line.

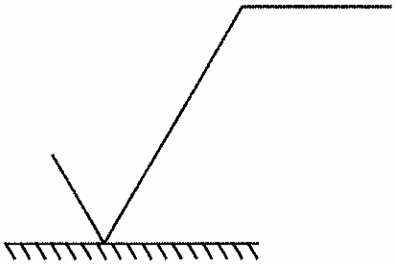

11.2.5 Positions of various specifications in the symbol

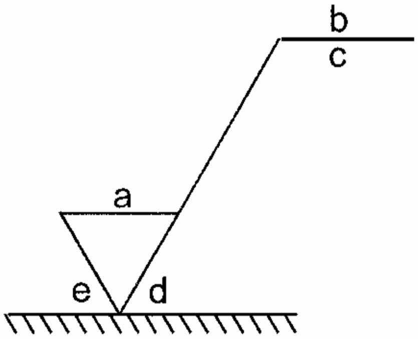

a. Roughness value – it is indicated either by any of the roughness grade symbols (N1, N2, ...N 12) or their respective roughness values in .... μm.

b. Machining process - the process of manufacturing is noted here (MILLED, DRILLED, etc.

c. Sampling length – the length of the surface being considered for determining the surface roughness value (0.25 to 2.5 mm)

d. Direction of lay – it is the primary direction of the surface pattern made by tool marks

Parallel

Perpendicular

Crossed

Multidirectional

Circular

e. Machining allowance – it is the machining allowance expressed in mm

11.2.6 Roughness symbols and values

Roughness Grade number	Roughness value in μm	Roughness symbol
N12	50	∼
N11 N10	25 12.5	∇
N9 N8 N7	6.3 3.2 1.6	∇∇
N6 N5 N4	0.8 0.4 0.2	∇∇∇
N3 N2 N1	0.1 0.05 0.025	∇∇∇∇

11.3 Abbreviations for materials

11.3.1 Ferrous materials

Sl. No.	Ferrous material	Abbreviation
1	Cast Iron	CI
2	Cast Steel	CS
3	Forged Steel	FS
4	Mild Steel	MS
5	Spring Steel	Sp.S

11.3.2 Non-ferrous materials

Sl. No.	Non-ferrous Material	Abbreviation
1	Aluminium	Al
2	Brass	Br.
3	Bronze	Bronze
4	Copper	Cpr
5	Gun Metal	GM
6	White Metal	WM
7	Zinc	Zn

11.4 Drawing abbreviations

Sl.No.	Term	Abbreviation
1	Across corners	A/C
2	Across flats	A / F
3	Alteration	Alt
4	Approved	APPD
5	Approximate	AAPROX
6	Assembly	Assy.
7	Auxiliary	AUX
8	Centimeter	cm
9	Centres	CRS
10	Centre line	CL

Sl.No.	Term	Abbreviation
11	Centre to centre	C / C
12	Checked	CHD
13	Circular pitch	CP
14	Connected	CONN
15	Continued	CONTD
16	Counterbore	C'BR
17	Countersink	CSK
18	Cylindrical	CYL
19	Diameter	DIA
20	Diametral pitch	DP
21	Dimension	DIM
22	Drawing	DRG
23	External	EXT
24	Figure	FIG
25	Ground level	GL
26	Hexagon	HEX
27	Horizontal	HORZ
28	Inspected	INSP
29	Inside diameter	ID
30	Internal	INT
31	Kilogram	kg
32	Kilometre	km
33	Left hand	LH
34	Machine	M / C
35	Manufacturing	MFG
36	Maximum	MAX
37	metres per second	m / s
38	Mechanical	MECH
39	Millimetre	mm
40	Minimum	MIN

Sl.No.	Term	Abbreviation
41	Miscellaneous	MISC
42	Module	m
43	Nominal	NOM
44	Not to scale	NTS
45	Number	No.
46	Opposite	OPP
47	Outside diameter	OD
48	Pitch circle diameter	PCD
49	Pitch circle	PC
50	Quantity	QTY
51	Radian	rad
52	Radius	R
53	Reference	REF
54	Required	REQ
55	Right hand	RH
56	Serial Number	SL.NO.
57	Specification	SPEC
58	Spherical	SPHERE
59	Spot face	SF
60	Square	SQ
61	Symmetrical	SYM

11.5 Representation of various features in drawings

Title	Actual Projection/Section	Convention
External Threads	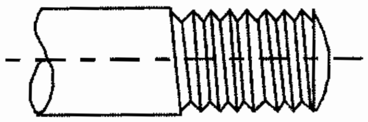	
Internal Threads	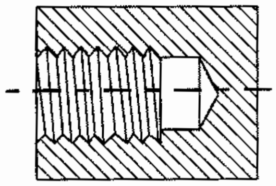	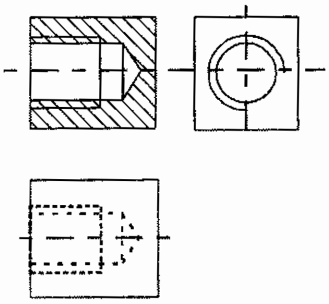
Slotted Head	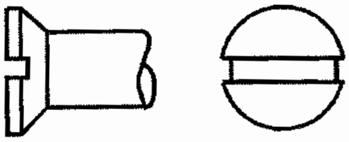	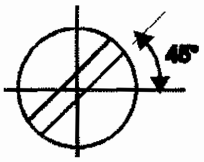
Square End and Flat	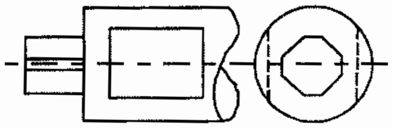	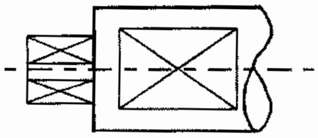
Radial Ribs	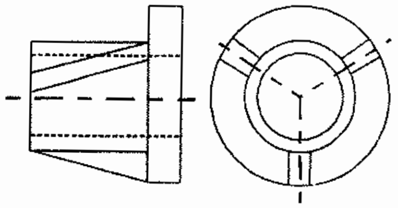	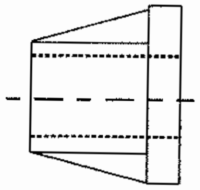
Bearing	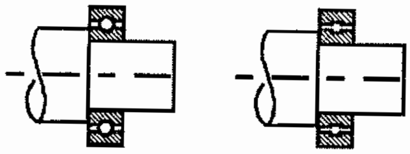	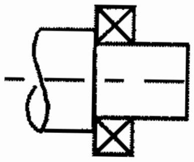
Knurling	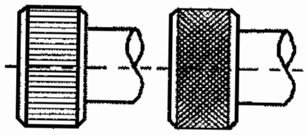	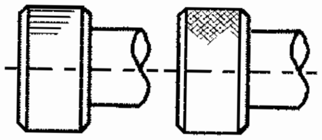

Title	Actual Projection/Section	Convention
Holes on Linear Pitch	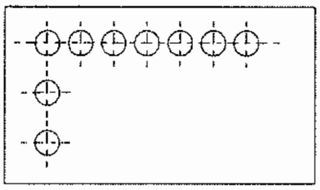	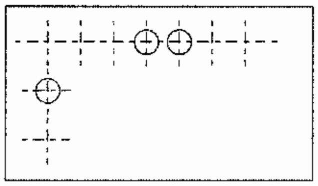
Holes on Circular Pitch	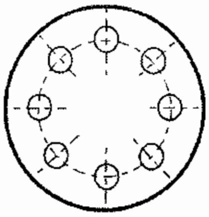	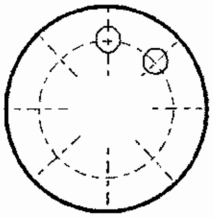
Leaf Spring		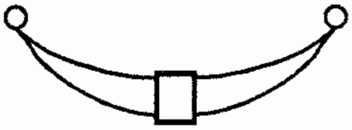
Ratchet and Pawl	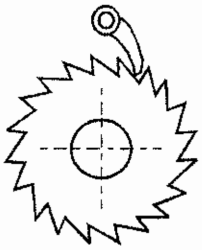	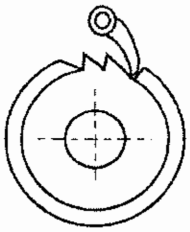
Splined Shaft	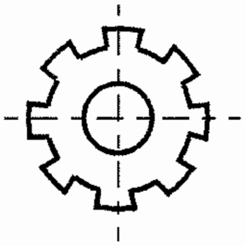	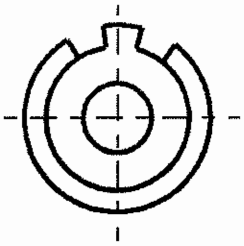
Springs	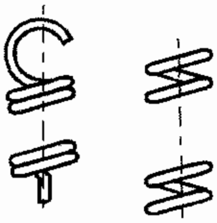	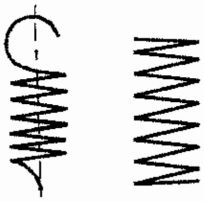
Repeated Parts	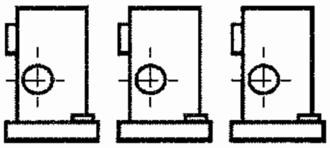	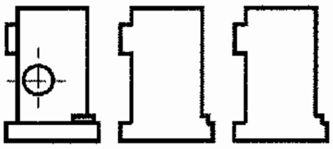

Sl. No.	Description	Symbol	Specified dimensions	
01.	Round section	Ø	d	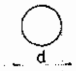
02.	Tube		d x t	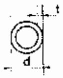
03.	Square section		s	
04.	Triangular section		a	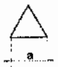
05.	Hexagonal section		s	
06.	Half round section			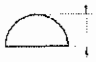
07.	Rectangular section		w x t	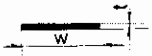
08.	Angle section		A xB	
			A xB	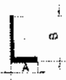
09.	T Section		h x b	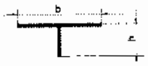
			h x b	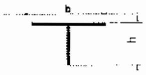
10.	I - beam section		h	
11.	Channel section		h	
12.	Z section			
13.	Rail section			
14.	Bulb Angle section		h	
15.	Bulb plate section		h	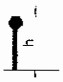

11.6 Blue print reading

Blue print is the common name given to the copies taken from an original drawing. The name has nothing to do with the colour of the paper or the colour of the drawing lines.

Blue print reading is an essential skill for any technical persons to perform his job in industry satisfactorily for manufacturing a component accurately and correctly. Proper interpretation of the drawing is essential. Blue print reading involves the following aspects.

1. Visualization of the object from the given orthographic views
2. Interpretation of the dimensions, notes and symbols.

For blue print reading, one must have a thorough knowledge of principles of drawing and orthographic projections & also various manufacturing processes.

Some drawings are given as exercises to read them correctly and answer the questions given below each of them.

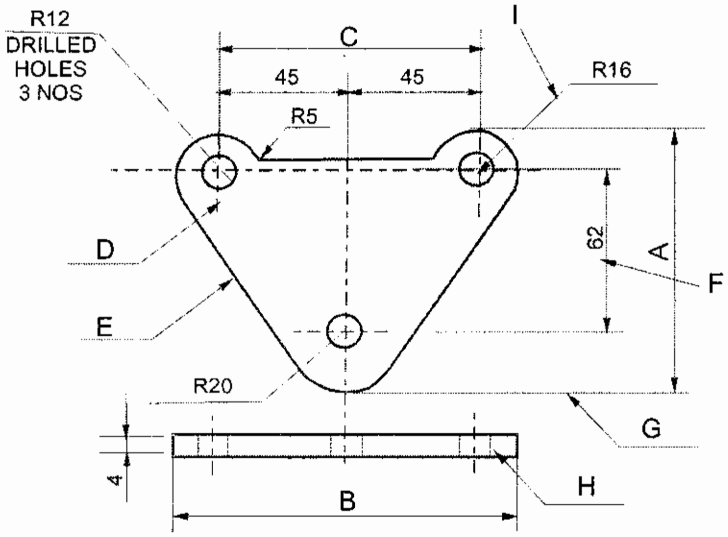

Answer the questions given below with reference to the above diagram

1. What are the two views drawn in the diagram ?
2. What are the types of lines indicated by the letters D E, F, G, H,& I ?
3. What is the total width of the part (B) ?
4. How many holes are there in the part ?
5. What is the thickness of the plate ?
6. What are the diameters of the holes ?
7. What is the radius of the arc in the top of the object ?
8. What is the distance between the top two holes (C) ?
9. What is the dimension representing " A "

Answer the given questions with reference to the diagram

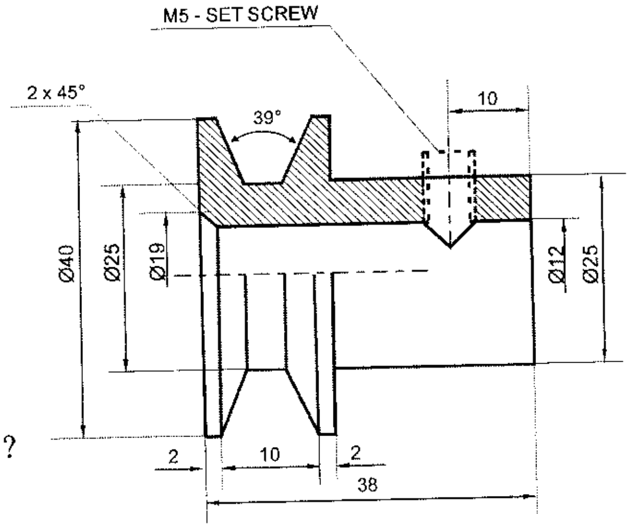

1. What is the name of the part ?
2. Mention the use of the part.
3. What is the outer diameter of the part ?
4. What is the length of the part ?
5. What is the size of the thread ?
6. What is the angle of the V - groove ?
7. What is the diameter of the central hole ?
8. What is the depth of the V - groove ?

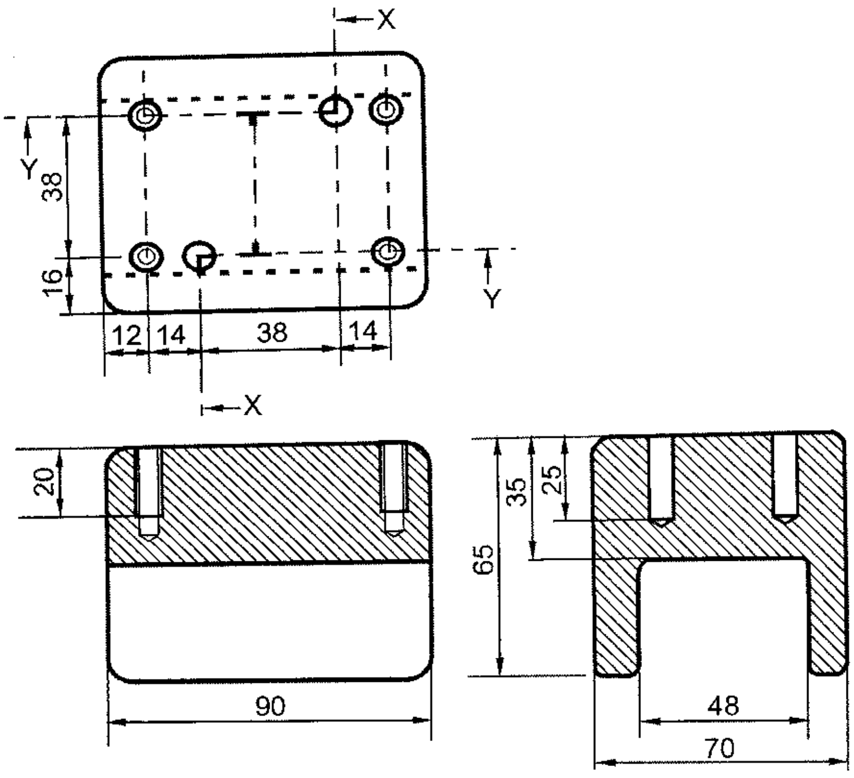

SECTION YY SECTION XX

Answer the questions given below with reference to the above diagram

1. What is the length, breadth and height of the part ?
2. How many tapped holes are there in the part ?
3. What is the depth of untapped holes ?
4. What is the depth of tapped holes ?
5. What is the width and height of the hollow portion of the part ?

Answer the given questions

with reference to the diagram

1. What is the name of the part ?
2. What is the pitch circle diameter ?
3. How many holes are there in the part ?
4. What is the outer diameter of the part ?
5. What is the thickness of the part ?
6. What is the angle between two adjacent holes ?

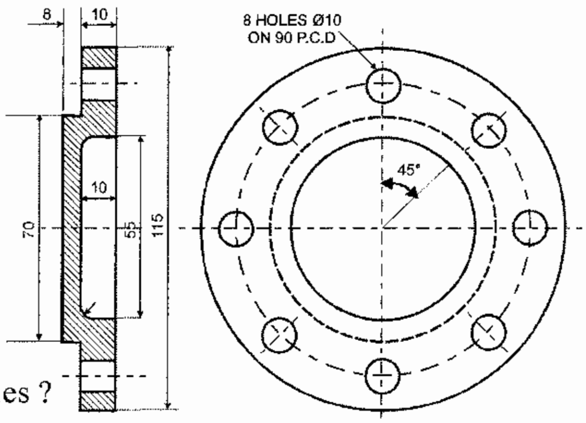

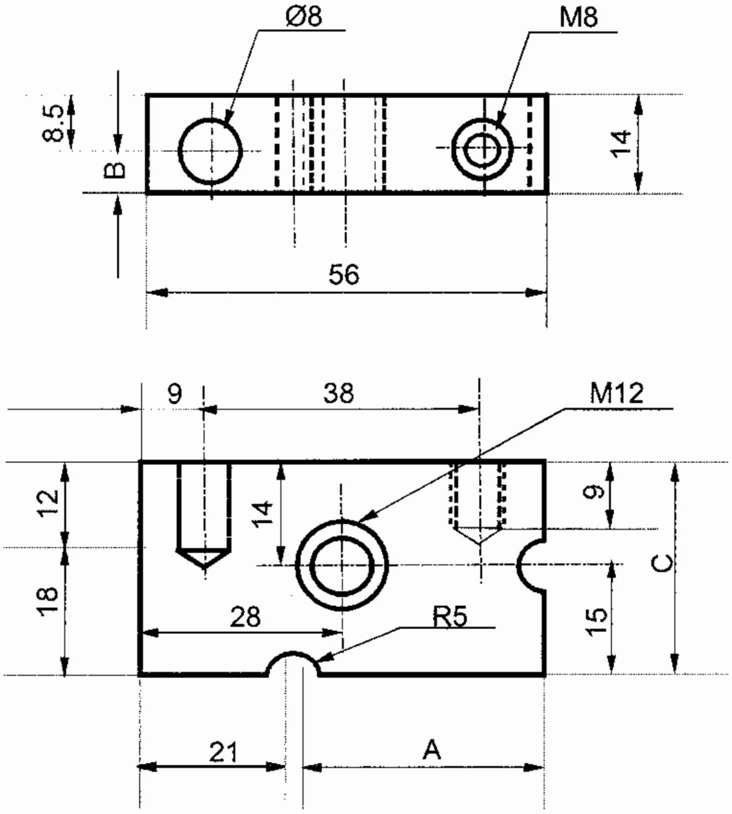

FILLER PLATE

Answer the questions given below with reference to the above diagram

1. What is the name of the part ?
2. How many holes are tapped ?
3. What is the radius of the groove ?
4. What is the height, length and width of the part ?
5. What is the tap size and length of the tapped portion of the smaller tapped hole ?
6. What are the dimensions represented by A, B & C ?

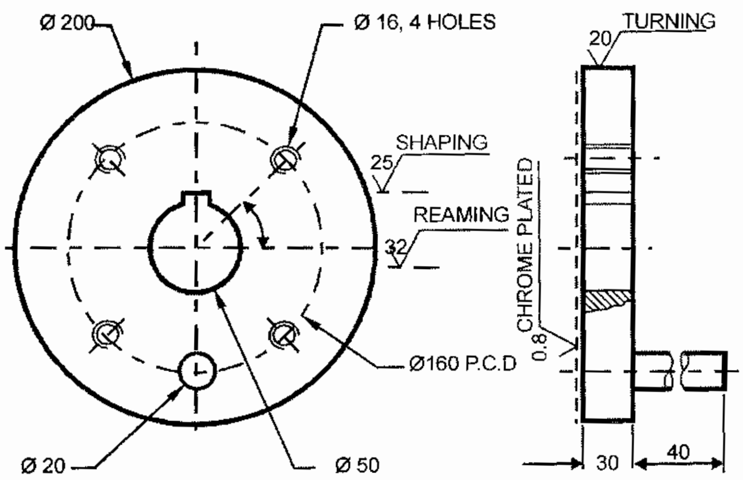

Answer the questions given below with reference to the above diagram

1. How many threaded holes are there in the part ?
2. What is the size of the pin ?
3. What is the overall diameter of the flange ?
4. What is the operation involved in machining the outer diameter ?
5. What is the intended finishing process for the face of the flange ?
6. What is the diameter of the central hole ?
7. What is the process by which the keyway is to be machined ?
8. What is the roughness of the reamed hole ?

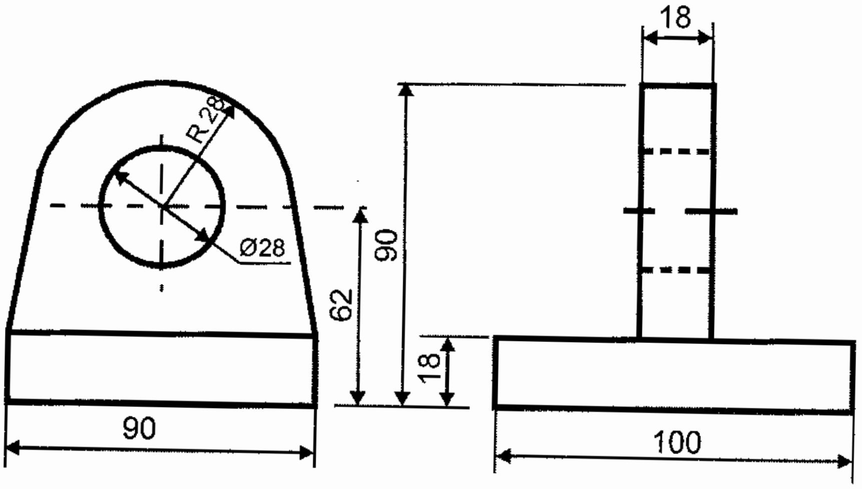

Answer the questions given below with reference to the above diagram

1. What are the overall dimensions of the bracket shown ?
2. What is the shape and size of the base of the bracket ?
3. What is the size of the hole in the bracket ?
4. What is the radius of the curved top ?

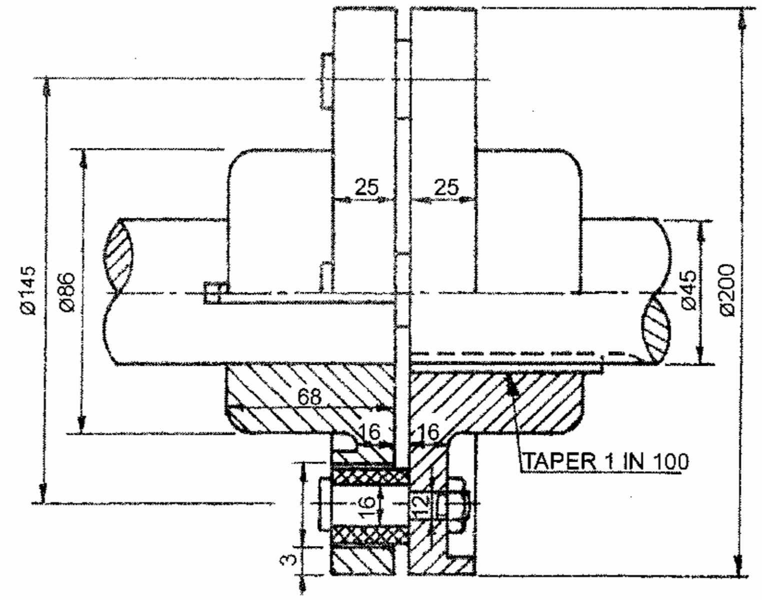

Answer the questions given below with reference to the above diagram

1. What is the diameter of the shafts to be joined ?
2. What is the type of key used in the coupling ?
3. What is the outer diameter of the flange ?
4. How many bolts are used in the coupling ?

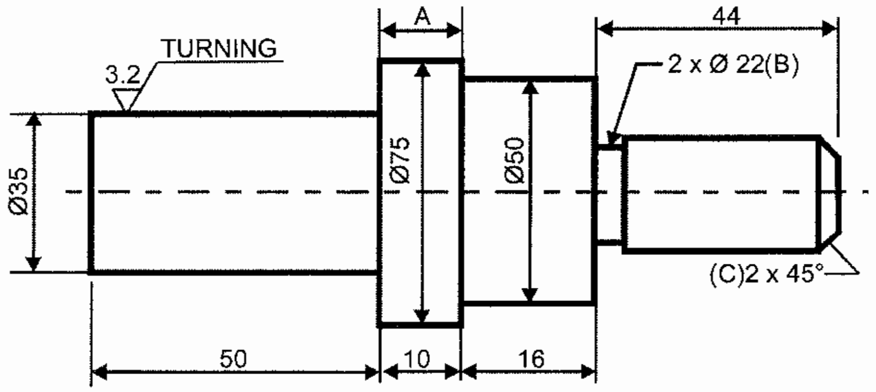

Answer the questions given below with reference to the above diagram

1. What is the diameter of the portion indicated by A ?
2. What is the overall length of the part ?
3. What is the dimension B indicate ?
4. What is the dimension C indicate ?
5. What is the meaning of the machining symbol placed on the portion of the part of Ø35 mm ?

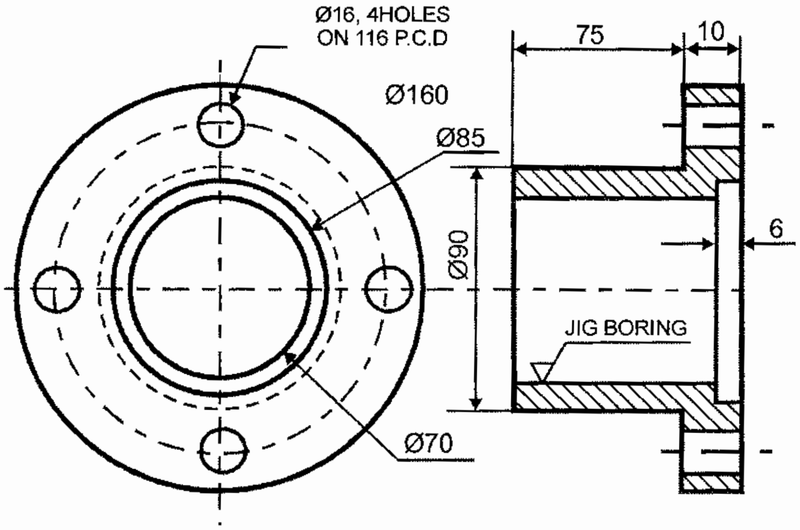

Answer the questions given below with reference to the above diagram

1. What is the overall diameter of the flange ?
2. What does the machining symbol indicate ?
3. What is the diameter and thickness of the flange ?
4. What is the distance between the centres of Ø16mm opposite holes ?
5. What does the circle in dotted line of the front view represent ?
6. What is the length and thickness of the pipe ?

12. AutoCAD

12.1 Introduction

AUTOCAD was developed by an American company Autodesk Inc., and term 'CAD' refers to Computer Aided Design (or) Drafting.

Computer Aided Drafting – CAD is defined as a process of producing drawings in which computer, software and related hardware are used. The software stored in the disks provides the program and the drafter gives the commands and data to the computer to perform the drawing task.

Manual drawings are made using various drawing instruments. It is the foundation of engineering communication and Computer Aided Drafting (CAD) is developed on the fundamentals of manual drawing.

The beginning of computer graphics is assumed to have happened in 1950. The " Whirlwind computer " were installed at Massachusetts Institute of Technology (MIT) and drawing of simple figures was done in that year. When the International Business Machine Corp. (IBM) started making computers suitable for graphics in 1964, CAD became commercially available. A tremendous advance in hardware as well as software was made in 1980's. After a slow start, the computer graphics grew dramatically to a popular system for drafting by the beginning of 1990's.

Other than AutoCAD, several CAD packages such as Solid Works, Unigraphics and Pro - Engineer are also available in modern Computer Aided Drafting (CAD).

12.2 Applications of AutoCAD

Mechanical Engineering	:	In designing of Machine elements, Assemblies, Automobile Components.
Civil Engineering	:	In designing of Architectural landscapes, buildings and dams.
Electrical Engineering	:	In designing of Electrical wiring circuits and making PCBs (Printed circuit boards)
Film Industry	:	For creation of 3D graphical models.

12.3 Advantages of AutoCAD

> Drawings can be made easily and quickly
> Accuracy of the drawings is high
> Editing and modifying the existing drawings are possible
> Storing and retrieving the drawings are very easy
> Dimensioning of drawings is done easily
> Drawings can be accessed and shared by people at different places of the world simultaneously
> It is possible to customize AutoCAD to suit our needs.

12.4 Hardware and software

Computer is an electronic device which controls raw data into meaningful information. It is a machine that accepts data as the input, processes it and produces the desired results as output.

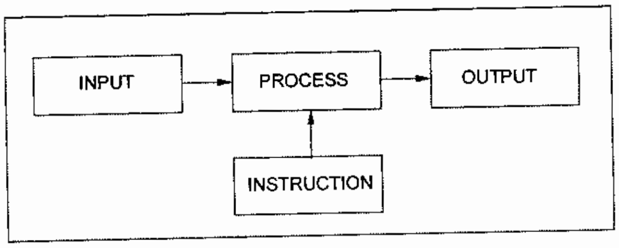

Fig. 12.1 Units of computer systems

12.4.1. Hardware

Hardware of a computer includes all the physical equipments or devices associated with it. Input devices, output devices, Central Processing Unit (CPU), Memory storage are some important elements of hardware.

Input devices

Input device is a mechanism used to enter data or information into the processing unit Keyboard, mouse, scanners are some of the input devices.

Output devices

After the input data are processed inside CPU, the results are stored in the memory. When these results are to be retrieved and converted as printed drawings, we need output devices. Some of the output devices are printers, (Dot matrix, Laser Jet, Ink Jet) and electro mechanical pen plotters.

Central Processing Unit (CPU)

CPU is the most important part of a computer hardware. It serves as the brain for all the processes done in the computer. The processing is executed with the help of the micro processor of different clock speeds.

Memory Storage

The memory storage devices of a computer are of two types.

1. Primary Storage
2. Secondary Storage

The primary Storage is useful when the control unit receives or retrieves data for execution. RAM (Random Access Memory) and ROM (Read Only Memory) are primary storage.

Secondary Storage in the form of hard disks, floppy disks and CDs are useful only in storing data.

12.4.2 Software

Software is a set of chain like statements, commands and procedures used by a computer to perform a task. Generally software are classified as

1. System software
2. Application Software

System software includes operating systems like Windows 98, Linux etc., and compilers.

Application software includes major packages like Microsoft Office, Adobe Page Maker, Photo Shop etc.,

12.5 AutoCAD – getting started

When the computer is switched on, the windows (95 or 98 or xp) operating system is loaded in the main memory (RAM).

AutoCAD can be started by

Click the start button and Program > AutoCAD > AutoCAD

AutoCAD icon in the window Desktop is double clicked to select AutoCAD program.

When the AutoCAD is started, the program displays a typical AutoCAD screen as shown in *Fig. 12.2*

12.6 Important Features of AutoCAD

12.6.1 Title bar

This is at the top of the window showing the name of the program and the name of the current drawing.

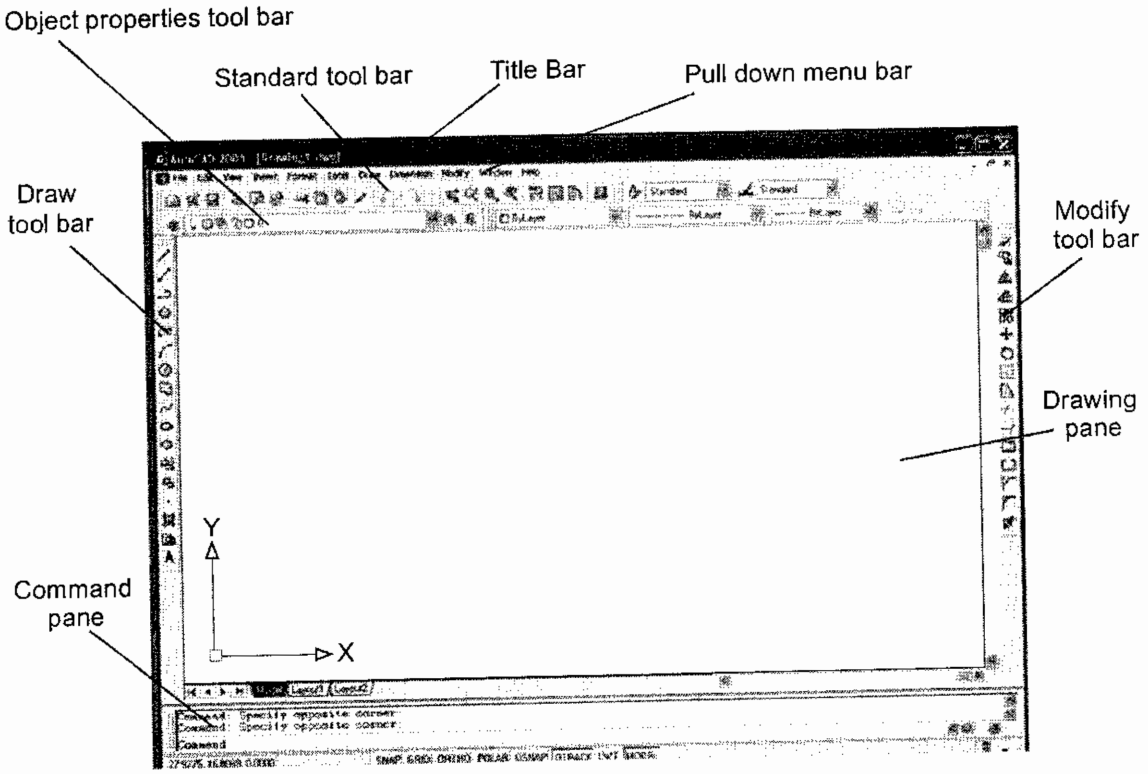

Fig. 12.2 AutoCAD window

12.6.2. Pull down menu bar

It is located just below the title bar providing pull down menus. From pull down menu bar, we can choose many commands - each of them categorized under a main menu. When the pointer is brought to each menu, a list of sub menu can be opened for selection.

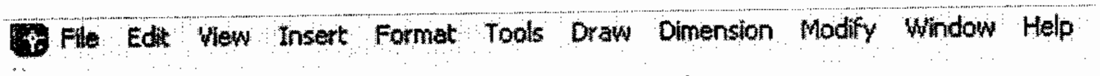

Fig. 12.3 Pulldown menu bar

The "File" menu	gives sub menu for managing the files like New, Open, Close, Save, Save as, Export, Page setup, Print and Exit.
The "Edit" menu	covers the file editing operations like Undo, Redo, Cut, Copy, Paste, Select All, Clear and Find.
The "View" menu	covers about the view of the drawing on the screen like Redraw, Zoom, 3D views, Shade, Render, Display and Toolbars.
The "Insert" menu	covers Block, Layout and Hyperlink.
The "Format" menu	contains sub menus like Layer, Colour, Line type, Line weight, Text style, Dimension style, Unit and Drawing Limits.
The "Tools" menu	covers Spelling, Display order, Properties, Auto LISP etc.

The "Draw" menu provides all drawing commands such as Line, Ray, Multiline, Polyline, 3D Polyline, Polygon, Rectangle, Arc, Circle, Spline, Ellipse, Block, Hatch etc.

The "Dimension" menu covers the commands like Quick Dimension, Linear, Aligned, Radius, Diameter, Angular, Baseline, Leader, etc.

The "Modify" menu gives modification commands like Erase, Copy, Mirror, Offset, Array, Move, Rotate, Stretch, Trim etc,.

The "Window" menu makes the screen to be viewed in cascade, horizontally, vertically.

The "Help" menu provides details about the software program and help topics under different categories.

12.6.3 Tool bars

When the AutoCAD is started different tool bars are displayed.

The displayed toolbars are

1. Standard toolbar
2. Object properties tool bar
3. Draw tool bar
4. Modify tool bar

Standard toolbar

It is displayed just under the pull down menu bar. It consists of icons like New, Open, Save, Plot, Plot Preview, Publish, Cut to clipboard, Copy to clipboard, Paste from Clipboard, Match properties, Undo, Redo, Pan Real time, Zoom Real time, Zoom window, Zoom previous, Properties, Design centre, Tool Palettes and Help. It also has text style control and dimension style control icons.

Object Properties toolbar

It is found below the standard toolbar. It facilitates immediate selection of layers, Line types and Change of properties commands. It contains Layer properties manager, Lock or unlock layer, Layer previous, Colour control, Line type control and Line weight control icons.

Fig. 12.4 Object properties tool bar

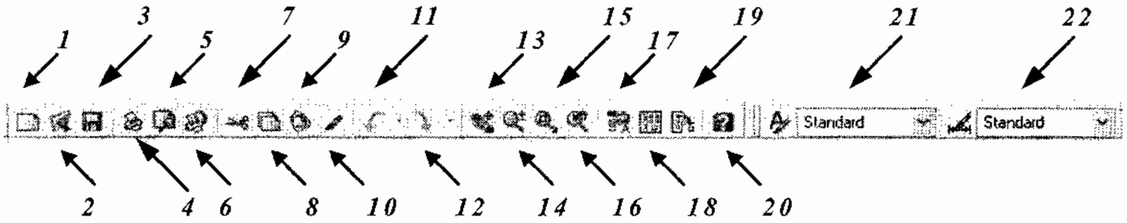

Fig. 12.5 Standard tool bar

1. Q New 2. Open 3. Save 4. Plot 5. Plot preview 6. Publish 7. Cut to clipboard 8. Copy to clipboard 9. Paste from clipboard 10. Match properties 11. Undo 12. Redo 13. Pan Realtime 14. Zoom Realtime 15. Zoom window 16. Zoom previous 17. Properties 18. Design centre 19. Tool palettes 20. Help 21. Text style control 22. Dimension style control

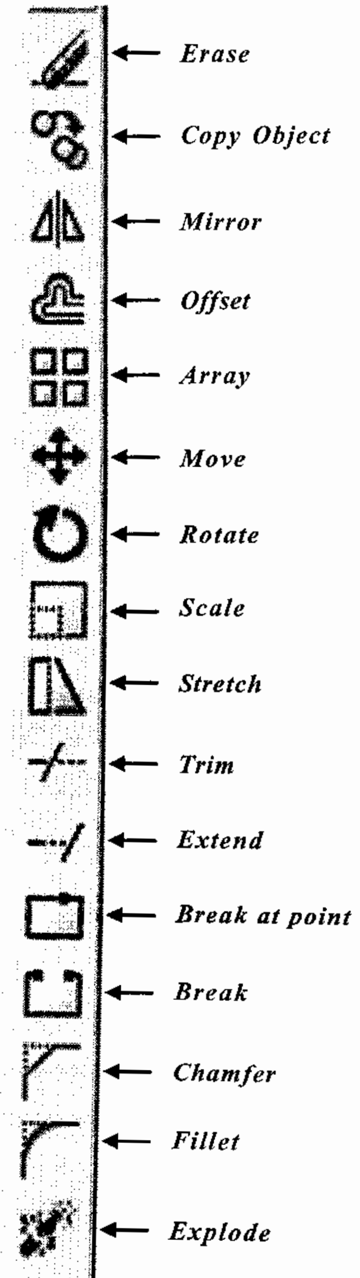

Fig. 12.6 Modify tool bar

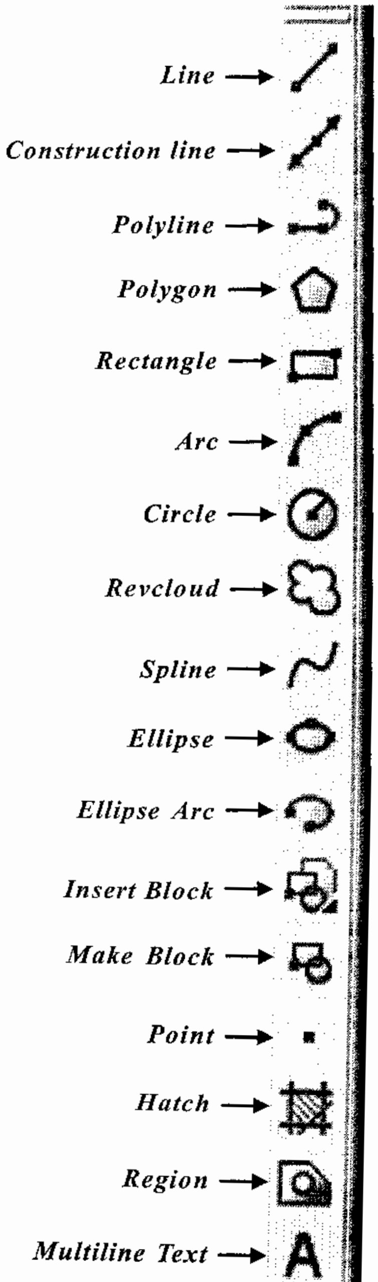

Fig. 12.7 Draw tool bar

Draw tool bar

It is placed at left of the drawing pane. It contains tools needed to create new objects. It contains icons such as Lines, Construction line, Polyline, Polygon, Rectangle, Arc, Circle, Rev cloud, Spline, Ellipse, Ellipse Arc, Insert block, Make block, Point, Hatch, Region & Multi line Text.

Modify Toolbar

It is found at the right side of the drawing pane. It contains icons which modify the existing objects in a drawing. Erase, Copy object, Mirror, Offset, Array, Move, Rotate, Scale, Stretch, Trim, Extend, Break at point, Break, Chamfer, Fillet, and Explode are the icons found in a modify toolbar.

12.6.4 Command window

AutoCAD commands, view prompts and program messages can be typed in a command window. It is found just below the drawing pane.

The command window initially displays the three most recent lines of prompts, but you can change the number of lines displayed. Scroll bars on the right side of this window let you scroll back to see previous prompts.

Fig. 12.8 Comman window

12.6.5 Status bar

The status bar is a horizontal area found at the bottom of the document below the command window. It provides information about the current status of what is viewed in the window.

12.7 AutoCAD commands

Different AutoCAD commands are entered in the command window to execute or make a particular drawing. These commands can be grouped under different categories and are shown in the next page.

Sl.No.	CATEGORY	AUTOCAD Commands
1.	Drawing commands	Arc, circle, dount, ellipse, line, mline, pline, point polygon, ray, rectang, sketch, spline, trace, xlin.
2.	Editing Commands	Array, break, bhamfer, bcanges, chprop, copy, ddedit, dist, divided, erase extened, fillet, insertobj, length, match prop, measure, mirror, meledit, move, offset, oops, pedit, purge, rotate, scale, splinedit, stretch, trim.
3.	Text Commands	Mtext, text
4.	Display Commands	3dorbit, 3dzoom, camera, ddtype, ddvpoint, dview, edge, hide, light, mview, pan, plan, qtext, redraw, redrawall, regen, regenall, regenauto, scene, view, viewers, vpoint.
5.	Dimensioning Commands	Dim & dim1, dimaligned, dimangular, dimbaseline, dimcenter, dimcontinue, dimdiameter, dimedit, dimlinear, dimordinate, dimradius, dimstyle, dimedit, leader.
6.	Setting Commands	Base, Color, elev, fill, isplane, layer, limits, linetype, itscale, lweight, mlstyle, multiple, options, ortho, osnap, snap, style, ucsicon, ucuman, ucs
7	Hatching Commands	Bhatch, boundary, hatch, hatchedit, region
8	3D surface Commands	Edgesurf, pface, rulesurf, tabsurf
9	3D drawing / Solid commands	3d face, 3dmesh, 3dpoly, box, cone, cylinder, interfere, intersect, revolve, sphere, torus, union, wedge.
10	Block commands	Block, explode, insert, minsert, wblock, xplode
11	System Variables	Aperture, blipmode, celtscale, cmddia, cords cvport, dispsilh, dragmode, edgemode, explmode filletrad, fontalt, gridmode, gridunit, gripsize, highlight, hpang, hpname, hpbound, hpmame, isavebak, limcheck, limmax, limmin, itscale, lunits, measurement mirrtext, mtexted, offsetdist, orthomode, osmode, pellipse, pickbox, plinewid, plotrotmode, polysides qtextmode, savetime, shadeedge, shapstly, splinetype, surftab1, surftab2, trimmode, ucsfollow ucsion

12.8 Command entry

Typically, there are three ways of giving a command in AutoCAD. They are listed below

1. Giving commands using keyboard

When a new document is opened, the command pane is ready to accept commands. The required command is typed in the command pane and the enter key is pressed.

2. Giving commands using toolbars

The toolbar is an array of icons. Clicking the appropriate icon activates the relevant command.

3. Giving command using dropdown menus

All commands are also available in dropdown menus. Similar types of commands are categorized and are kept in relevant dropdown menus. Required command is clicked from the dropdown menu titles to activate the relevant command.

12.9 File management in AutoCAD

The file management involves creating a new document, opening a existing document, saving and closing the current document and finally quitting AutoCAD.

12.9.1 Creating a new document

To create a new drawing file, any one of the following procedures is adopted.

1. In the AutoCAD pull down menu bar click – file ⟶ New
2. In the standard toolbar, click the icon Q new
3. In the command entry pane, Type NEW ↵
4. In the keyboard, press Ctrl + N

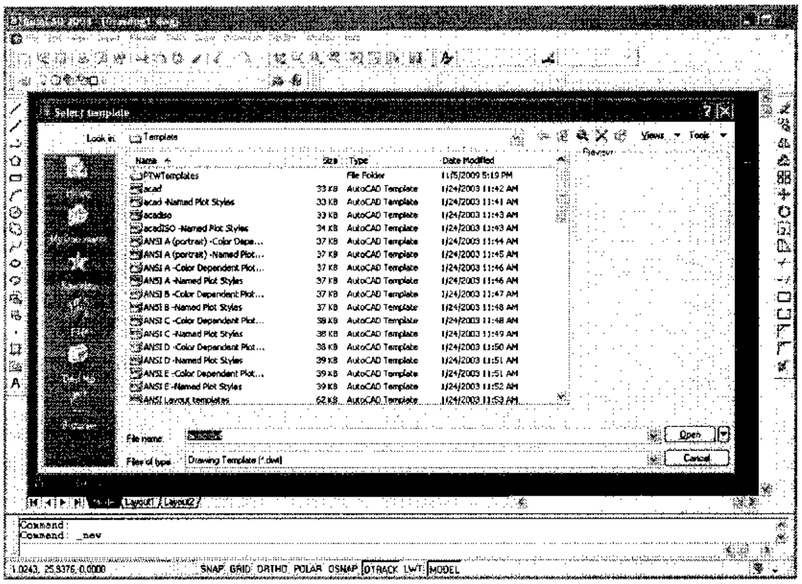

Fig. 12.9
AutoCAD creating a new document

By performing any one of the above procedures, a window as shown in *Fig. 12.9* is opened.

12.9.2. Opening an existing document

To open an existing file, the following procedure is adopted.

1. In the AutoCAD pull down menu bar, Click – file ⟶open
2. In the standard toolbar, click the icon Open
3. In the command entry pane, type OPEN ↵
4. In the keyboard, press Ctrl + O

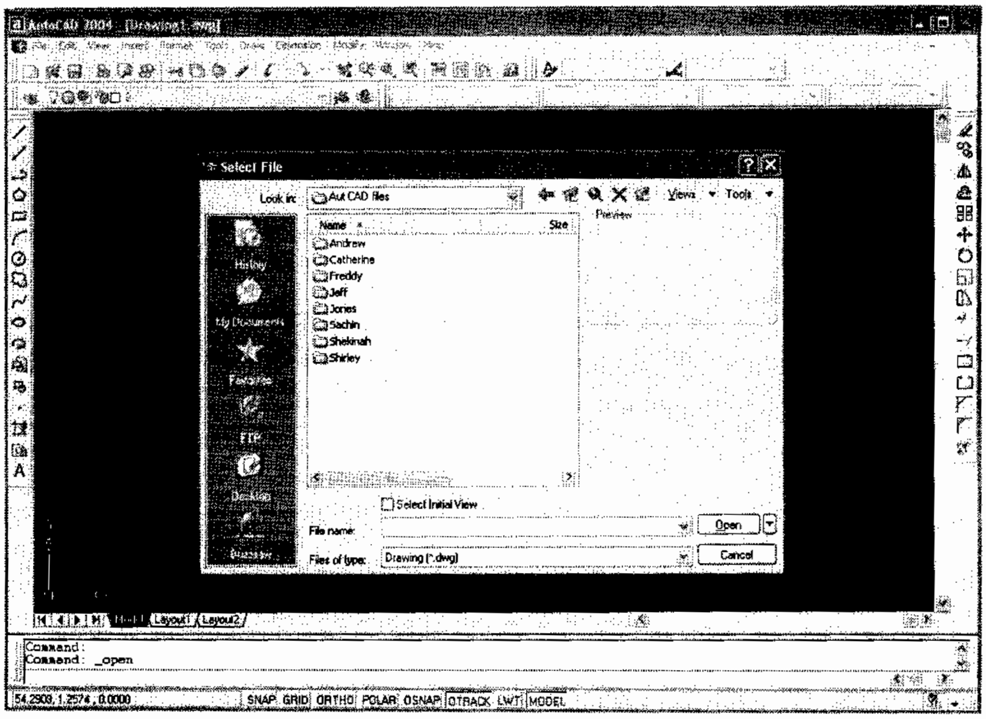

Fig. 12.10 Open dialog box

By performing any one of the above procedures, a window as shown in *Fig. 12.10*is opened.

12.9.3. Saving the current document

To save the current drawing, the following procedure is adopted.

1. In the AutoCAD, pull down menu bar, Click – file⟶ Save or File ⟶ Save as
2. In the standard toolbar, click the icon Save
3. In the command entry pane, type Q Save ↵
4. In the keyboard, press Ctrl + S

By performing any one of the above procedures, a window as shown in *Fig. 12.11* is opened.

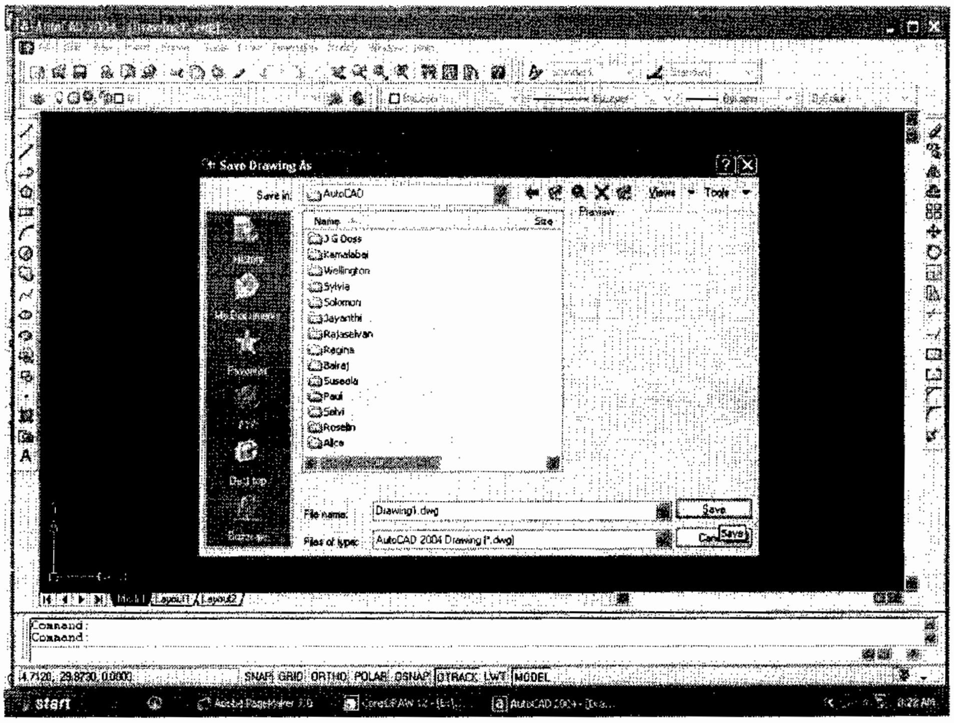

Fig. 12.11 Save As dialog box

12.9.4 Closing the current document

To close the current drawing the following procedure is adopted

1. In the pull down menu bar, click – file ⟶ Close
2. In the command entry pane, type "CLOSE" ↵

When any one of the above procedures is executed, a dialog box as shown in *Fig. 12.12* is displayed.

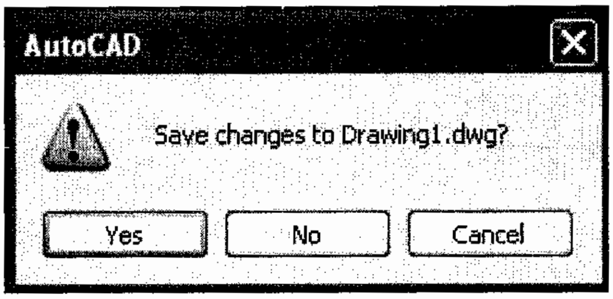

Fig. 12.12 Closing the correct document

In the above dialog box, the yes button is clicked to close the file.

12.9.5 Quitting AutoCAD

To quit AutoCAD window, any one of the following actions is done.

1. In the pull down menu bar, click – File ⟶ Exit
2. In the command entry pane, type "EXIT" ↵

12.10 Draw command

Some primary Draw commands are explained in the following pages

12.10.1 LINE command

This command is used to construct a line from one point to another. It is specified by its two endpoints.

To draw a line,

1. Click on the icon named **line** in the draw toolbar
2. In the pull down menu bar, click Draw → Line
3. In the command entry pane, type LINE ↵

By performing any one of the above tasks, AutoCAD prompts "Specify first point" A point on the drawing pane is clicked using cursor.

AutoCAD prompts "Specify next point" or (Undo)	Another point on the drawing pane is clicked using cursor. ↵

On completion of the above tasks, a straight line appears on the drawing pane.

In AutoCAD, coordinate system is followed to locate the points. 2D drafting is done by considering the drawing pane as X , Y plane. The location of a point is specified by its X and Y coordinates. The left hand bottom corner on the screen is considered as origin (0,0). Generally there are three coordinates systems used in AutoCAD.

1. Absolute coordinate system
2. Relative coordinate system
3. Polar coordinate system

In absolute coordinate system, the points are located with respect to the origin (0,0) to draw a line. To mark a point, the value is given in pairs as (X Coordinate value, Y coordinate value)

Draw a line by Absolute coordinate System

Command	: Line ↵
Specify first point	: 0 , 0 ↵
Specify next point or (undo)	: 80, 0 ↵
Specify next point or (undo)	: 80, 80 ↵
Specify next point or (close/undo)	: 0, 80 ↵
Specify next point or (close/undo)	: 0,0 (or) C ↵

In the relative coordinate system, the points are located with reference to previous point to draw a line. The symbol @ should prefix any relative entry.

Draw a line by relative coordinate system.

Command	: Line ↵
Specify first point	: 0 , 0 ↵
Specify next point or (undo)	: @ 40, 0 ↵
Specify next point or (undo)	: @ 0, 40 ↵
Specify next point or (close/undo)	: @ -40, 0 ↵
Specify next point or (close/undo)	: @ 0,-40 (or) ↵

In the polar coordinate system, the points are located by defining the distance of the point from the current position and the angle made to that line from the positive X – axis. The symbol @ should prefix any relative entry similar to relative coordinate system. In addition, the symbol< should be placed between the distance and the angle.

Draw a line by Polar Coordinate system.

Command	: Line ↵
Specify First point	: 50 , 50 ↵
Specify next point or (undo)	: @ 40 < 0 ↵
Specify next point or (undo)	: @40 < 90 ↵
Specify next point or (close/undo)	: @ 40 < 180 ↵
Specify next point or (close/undo)	: @ 40 < 270 (or) C ↵

12.10.2 CIRCLE command

This command is used to draw a circle by several options. To draw a circle

1. Click on the icon named circle in the Draw tool bar.
2. In the pull down menu bar, click draw → circle.
3. In the command entry pane, type CIRCLE ↵

By performing any one the above tasks, AutoCAD prompts " specify centre point for circle or [3P/2P/Tty (tan tan radius)] "

Though there are several methods to draw circles, only two methods are described here.

1. Centre radius method
2. Centre diameter method

Centre radius method

Command : CIRCLE ↵

Specify centre point or [3P/2P/Ttr (tan tan radius)] : 25, 25 ↵

Specify radius of circle or [Diameter] : 10 ↵

Centre diameter method

Command : Circle

Specify centre point or [3P/2P/Ttr (tan tan radius)] : 20, 20 ↵

Specify radius of circle or [Diameter] : D ↵

Specify Diameter of circle : 15 ↵

12.10.3 ARC command

This command is used to draw arcs in many options. To draw an arc

1. Click on the icon Arc in the draw tool bar.
2. In the pull down menu bar, click draw ⟶Arc.
3. In the command entry pane, type ARC ↵

By performing any of the above tasks, AutoCAD prompts "specify start of the arc or [Centre]"

Though there are several methods to draw arcs in AutoCAD, only three points methods is described here.

Command : ARC ↵

Specify Start point or arc [center] : 0, 0 ↵

Specify Second point of arc [center / End] : 20, 20 ↵

Specify end point of arc : 40,0 ↵

12.10.4 ELLIPSE command

This command is used to draw an ellipse in many options. To draw an ellipse,

1. Click on the icon Ellipse in the draw tool bar.
2. In the pull down menu bar, click draw ⟶ Ellipse
3. In the command entry pane, type ELLIPSE ↵

By performing any of the above tasks, AutoCAD prompts " specify Axis end point of Ellipse or [Arc / Center] "

Though there are several methods to draw Ellipse in AutoCAD, only Axis, End points method is described.

Command : ELLIPSE ↵

Specify Axis end point of ellipse or [arc / center] : 0, 0 ↵

Specify Other end point of axis : 40, 0 ↵

Specify distance to other axis or [Rotation] : 25 ↵

12.10.5 POLYGON command

This command is used to draw a Polygon.

To draw a polygon,

1. Click on the icon Polygon in the draw tool bar.
2. In the pull down menu bar, click draw → Polygon.
3. In the command entry pane, type POLYGON ↵

By performing any of the above tasks, AutoCAD prompts " enter number of sides "

Command : POLYGON ↵

Enter number of sides : 6 ↵

Specify Centre at polygon or (edge) : E ↵

Specify first end point of edge : 4, 4 ↵

Specify Second end point of edge : 12, 4 ↵

12.10.6. RECTANGLE command

This command is used to draw a rectangle.

To draw rectangle.

1. Click on the icon Rectangle in the draw tool bar.
2. In the pull down menu bar, click draw → Rectangle.
3. In the command entry pane, type RECTANG ↵

By performing any of the above tasks, AutoCAD prompts " specify first corner point "

Command : RECTANG ↵

Specify first corner point or (Chamfer / Elevation / Fillet / Thickness / width) : 5, 5 ↵

Specify other corner point or (Dimension) : 15,10 ↵

12.10.7 HATCH Command

This command is used to draw hatching lines in a closed boundary region. There are several standard hatch patterns available in AutoCAD

Command : BHATCH ↵

The boundary hatch dialog box as shown in *Fig 12.13* appears

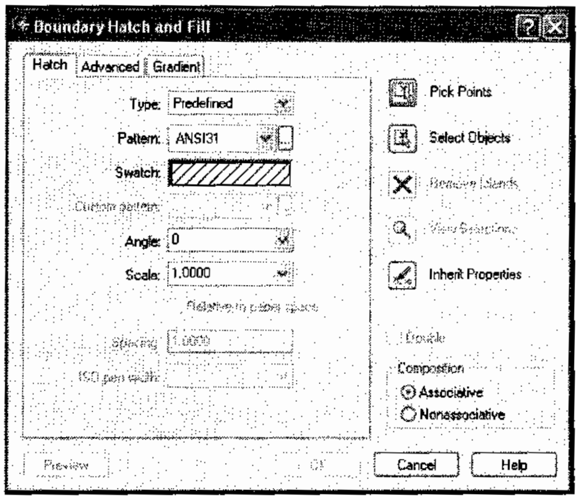

Fig. 12.13 HATCH Command dialog box

1. Click on pick points button in the dialog box
2. Select a point inside a closed object ↵
3. Click OK in the dialog box.

12.10.8. MULTILINE TEXT Command

This command enables text written on the drawing pane. The area in which the text is to be written should be located first on the screen / using cursor.

Command : M TEXT ↵

Specify first corner : 10,10 ↵

Specify opposite corner or [Height/Justify/Line spacing/Rotation/Style/Width] : 20,20 ↵

Multi line text editor appears on the screen

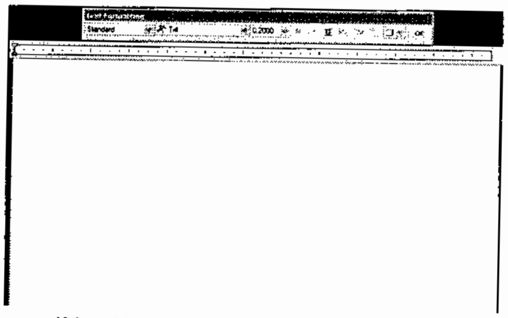

Fig. 12.14 MULTING TEXT editor

Required text is typed in the text editor. Here the font, size of letter etc., can be modified as required.

QUESTIONS

I . A. Choose the correct option

1. CAD stands for
   - a. Computer and Design b. Computer and Drafting
   - c. Computer Accounting Designing d. Computer Aided Drafting
2. Key board and mouse are
   - a. Processing devices b. Output devices
   - c. Input device d. Executing devices
3. Floppy drive is a
   - a. Primary storage device b. Secondary storage device
   - c. Input device d. Output device
4. Title bar is situated
   - a. at the top of the window b. at the bottom of the window
   - c. in the drawing pane d. in the tool bar
5. CIRCLE is
   - a. a display command b. a text command
   - c. a editing command d. a drawing command
6. Mtext is a
   - a. drawing command b. text command
   - c. display command d. editing command

I. B. Answer the following questions in one or two words

1. AutoCAD was developed by...........
2. Name some CAD packages other than AutoCAD.
3. What is the application of AutoCAD in film industry ?
4. What is the role of AutoCAD in electrical engineering ?
5. Where is pull down menu bar situated ?
6. Where is command window located ?

II. Answer the following questions in one or two sentenses

1. What are the application of AutoCAD ?
2. What is a computer?
3. What is an hardware?
4. Define - input device ?
5. What is an output device ?

6. What is a CPU ?
7. What are the types of memory stroage ?
8. Define - software.
9. How are software classiffied ?
10. How is AutoCAD started ?
11. What are the important features of a AutoCAD window ?
12. What are the types of AutoCAD tool bar ?
13. What are the icons present in the draw tool bar ?
14. What is a modify tool bar ?
15. What is the use of command window ?
16. What is status bar ?
17. What are the different categories of AutoCAD commands ?
18. Name some drawing commands.
19. Mention some diamension commands.
20. What are the methods of entering a commend in AutoCAD ?
21. What is known as file management in AutoCAD ?
22. How will you create a new drawing file ?
23. Write the method of opening an exiting document ?
24. How are files saved AutoCAD ?
25. How are points located in AutoCAD ?
26. What are the types of coordinate system in AutoCAD ?

III. Answer the following questions in about a page

1. What are the advantages of AutoCAD ?
2. Explain the menu found in pulldown menu bar ?
3. Explain the tool bar of AutoCAD ?
4. Explain command window ?
5. Explain command entry in AuotoCAD ?
6. How is an arc drawn in AutoCAD ?
7. Explain the command ' ELLIPSE ' ?
8. How is Hatching done in AutoCAD ?
9. Explain ' Multi line text ' command.

III. Answer the following questions in detail

1. Explain the hardware and software of a computer.
2. Explain file management in AutoCAD.
3. Explain how lines are drawn by different methods in AutoCAD.
4. How is a circle drawn in AutoCAD ?

QUESTION PAPER BLUE PRINT

Sl. No.	CHAPTER	Questions allotment				Remarks
		Part - A	Part - B	Part - C	Part - D	
		1 mark	4 marks	10 marks	80 marks	
1.	Introduction to Engineering drawing	3	1	-	-	
2.	Drawing instruments	3	1	1	-	
3.	Bureau of Indian standards	1	-	-	-	
4.	Lettering & Dimensioning	1	2	1	-	
5.	Geometrical curves	1	1	1	-	
6.	Scale of a drawing	1	1	-	-	
7.	Theory of projection	2	1	-	1	
8.	Sectional views	4	2	1	-	
9.	Fasteners	6	1	1	-	
10.	Assembly drawings	-	1	-	-	
11.	Drawing symbols & Blue print reading	2	-	-	-	
12.	AutoCAD	6	4	2	&	
	Total questions	30	15	7	1	

MODEL QUESTION PAPER

GENERAL MACHINIST PAPER - I

ENGINEERING DRAWING

Time : 3 hours Marks : 200

PART - I

A. Choose the correct answer **30 x 1 =30**

1. The basic drawing for all engineering drawings is

a. computer graphics b. original drawing
c. geometrical drawing d. manual drawing

2. Drawing boards with dimensions of 1000 x 700 x 25 is designated as

a. D_0 b. D_1 c. D_2 d. D_3

3. Freehand sketches are made with

a. 2B pencils b.4B pencils c. HB pencils d.2H pencils

4. The length and width of the arrow head should be in the ratio

a. 2:1 b. 1:2 c. 3:1 d. 5:2

5. The surface of a wall is

a. an irreglar surface b. a vertical surface
c. a horizontal surface d. an inclined surface

6. In first angle projection, the top view is placed

a. above the front view b. left side of the front view
c. right side of the front view d. below the front view

7. The lines used to show the hidden details of a drawing are known as

a. centre lines b. sectional lines
c. dotted lines d. hatching

8. The section of a connecting rod is generally shown in

a. half section b. revolved section
c.local section d. off-set section

9. The method of showing the section of an object adjacent to its view is

a. half section b. revolved section
c.local section d. removed section

10. Pitch of a screw is measured

a. parallel to its axis b. perpendicular to its axis
c. from the crest to the root d. from the root to the crest

11. .... is a temporary fastener

a. Welded joint | b. Riveted joint
c. Screwed joint | d. Forging

12. The angle of metric thread is

a. 29^0 b. 55^0 c. $47\frac{1}{2}^0$ d. 60^0

13. CAD stands for

a. Computer and Design | b. Computer and Drafting
c. Computer Accounting Designing | d. Computer Aided Drafting

14. Floppy drive is a

a. Primary storage device | b. Secondary storage device
c. Input device | d. Out put device

15. Mtext is a

a. drawing command | b. text command
c. display command | d. editing command

B. Answer the following questions in one or two words

16. What is the name of copies taken from the original drawings?

17. What are the types of geometrical drawings ?

18. What are the grades of drawing pencils ?

19. When was B.I.S established ?

20. What are the types projections ?

21. What is isometric projection ?

22. Mention any one type of a scale.

23. What is the process of drawing sectional lines known as ?

24. Draw the conventional representation of glass in section.

25. Who developed threads first?

26. What is lead of a thread?

27. What are keys made of ?

28. Who developed AutoCAD?

29. What is the role of AutoCAD is electrical engineering ?

30. Where is commanded windiow located ?

PART - II

Answer any ten questions in one or two sentences **10 x 4 = 40**

31. What is a drawing?

32. Mention the uses of a French curve.

33. What are the types of letters used in a drawing ?

34. What is aligned system of dimensioning?

35. Define - Ellipse.

36. What are the important uses of scales ?

37. What is third angle projection ?

38. What are the objectives of a sectional view ?

39. What is a sectional view ?

40. What is a keyway ?

41. What is a detail drawing ?

42. What is a CPU ?

43. Define software.

44. Mention some dimension commands.

45.What is known as file management in AutoCAD ?

PART - III

Answer the following questions in about a page **5 x 10 = 50**

46. Draw and explain the construction and uses of a drafter.

47. Draw different types of lines and specify their applications.

48. Mention different types of geometrical curves and explain.

49. What are the types of sectional views ?

50. Explain the different forms of threads with suitable diagrams.

51. Explain the tool bar of AutoCAD ?

52. Explain ‘ Multi line text ’ command.

PART - IV

Answer the following questions in detail **80 marks**

53. Draw the views in orthographic projection of the part shown in isometric view.

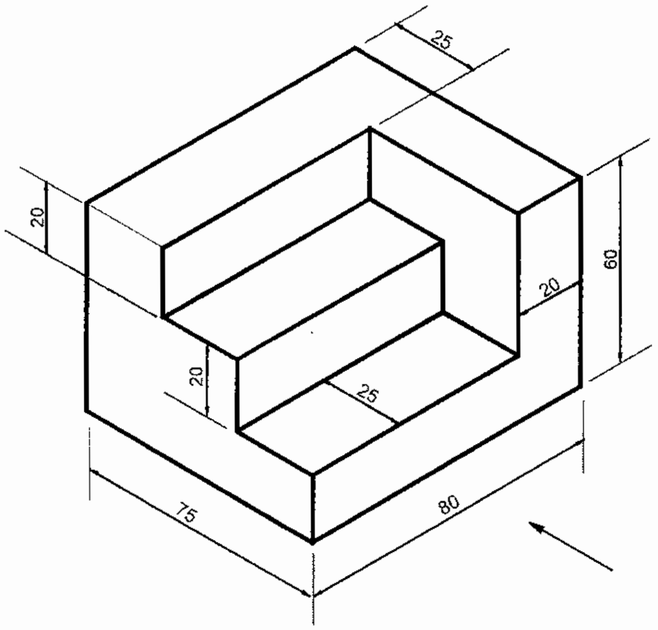

(or)
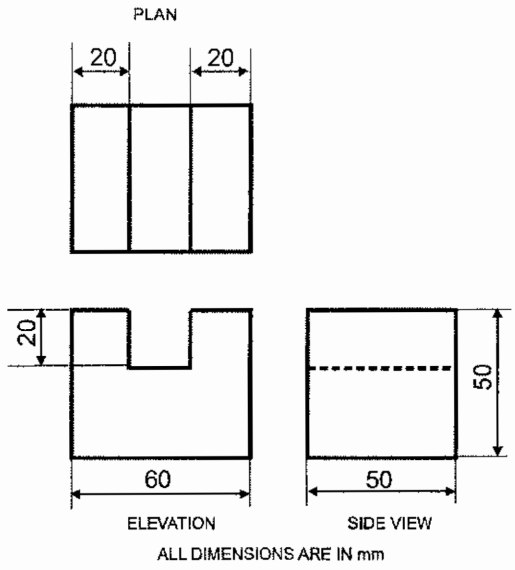
Draw the isometric view from the views shown in orthographic projection.